County of Otero Purchasing
1101 New York Ave., Room 118
Alamogordo, NM 88310
(575) 434-0710
FAX (575) 443-2914

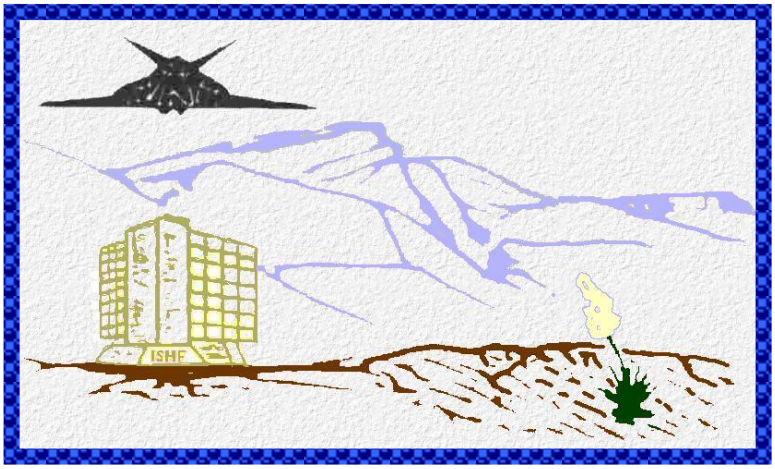

Sealed Bid# 16-008 Install Bay Doors On the EOC Building

Bid Deadline: Thursday, October 22, 2015, @ 3:00 PM

For Otero County

Procurement Agent Ginger Herndon

OTERO COUNTY
EMERGENCY OPERATIONS CENTER

PERMIT DOCUMENTS

24 JULY 2015

SHEET LIST

G-001	COVER SHEET
A-101	OVERALL FLOOR PLAN AND CODE REVIEW
A-102	FLOOR AND REFLECTED CEILING PLANS
A-401	ENLARGED PLANS & DETAILS
A-501	DETAILS
A-601	SCHEDULES & DETAILS
P-001	PLUMBING GENERAL NOTES & LEGENDS
P-101	PLUMBING WASTE & VENT PLAN
P-102	PLUMBING DOMESTIC WATER PLAN
P-401	ENLARGED PLUMBING PLANS
P-501	PLUMBING DETAILS
P-601	PLUMBING SCHEDULES
M-001	MECHANICAL GENERAL NOTES & LEGENDS
MD101	MECHANICAL DEMOLITION PLAN
M-101	MECHANICAL HVAC PLAN
M-501	MECHANICAL DETAILS
M-601	MECHANICAL SCHEDULES
E-001	ELECTRICAL GENERAL NOTES & LEGENDS
E-101	ELECTRICAL LIGHTING PLAN
E-102	ELECTRICAL POWER PLAN
E-601	ELECTRICAL DIAGRAMS AND SCHEDULES

GENERAL NOTES

THESE DRAWINGS UTILIZE A REFERENCE KEYNOTE SYSTEM THAT CONSISTS OF A 6-DIGIT NUMERICAL ROOT FOLLOWED BY A PERIOD AND AN ALPHANUMERIC SUFFIX (SUCH AS 05 5000.A01).

INFORMATION ASSOCIATED WITH EACH KEYNOTE IS LOCATED IN THAT SHEET'S RESPECTIVE NOTE BLOCK. THE ROOT OF THE REFERENCE INCLUDES MORE SPECIFIC INFORMATION ON THE ITEM BEING IDENTIFIED. THE SUFFIX IS NOT ASSOCIATED WITH ANY SPECIFIC REFERENCE IN THE SPECIFICATION SECTION.

CERTAIN REFERENCE KEYNOTES MAY CONTAIN MODIFIERS (CONTAINED WITHIN PARENTHESIS) LOCATED UNDERNEATH THE REFERENCE KEYNOTE. THE MODIFIER IDENTIFIES TYPE, SIZE, THICKNESS, AND OTHER ADDITIONAL CHARACTERISTICS ABOUT THE ITEM.

THE REFERENCE KEYNOTING SYSTEM SHALL NOT CONTROL THE CONTRACTOR IN DIVIDING THE WORK AMONG SUBCONTRACTORS OR IN ESTABLISHING THE EXTENT OF WORK TO BE PERFORMED BY ANY TRADE.

ABBREVIATIONS: REFERENCED FROM THE CONSTRUCTION SPECIFICATION INSTITUTE'S UNIFORM DRAWING SYSTEM TERMS AND ABBREVIATIONS MODULE.

STATE MAP

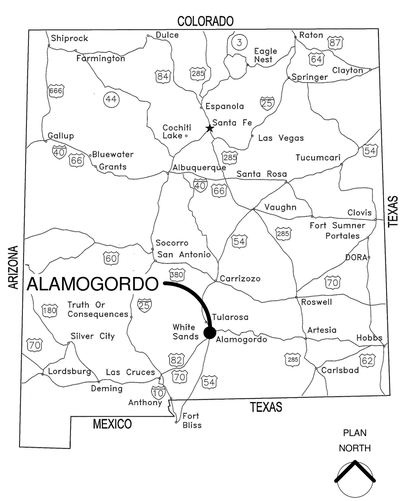

VICINITY MAP

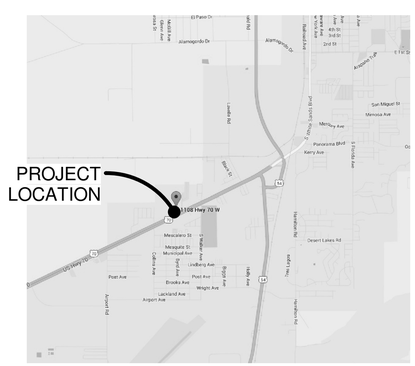

REGULATORY INFORMATION

CODE ANALYSIS: EXISTING BUILDING – LEVEL 1 REMOVAL AND REPLACEMENT
LEVEL 2 ALTERATIONS (WORK AREA IS LESS THAN 50%)
OTERO COUNTY EOC

A. PROJECT ADDRESS: 1108 HWY 70 W
ALAMOGORDO, NM 88310

B. APPLICABLE REGULATORY INFORMATION:
1. 2009 NM COMMERCIAL BUILDING CODE (2009 IBC, AS AMENDED)
2. 2009 NM PLUMBING CODE (2009 UNIFORM PLUMBING CODE, AS AMENDED)
3. 2009 NM MECHANICAL CODE (2009 UNIFORM MECHANICAL CODE, AS AMENDED)
4. 2008 NM ELECTRICAL CODE (2008 NATIONAL ELECTRICAL CODE, AS AMENDED)
5. 2009 NM ENERGY CONSERVATION CODE (2009 INTERNATIONAL ENERGY CONSERVATION CODE, AS AMENDED)
6. ICC/ANSI A117.1-2003
7. 2009 NM EXISTING BUILDING CODE (2009 IEBC, AS AMENDED)

C. OCCUPANCY GROUP: SEPARATED OCCUPANCIES (TABLE 508.4)
NO SEPARATION REQUIRED
GROUP B (SECTION 304, IBC) – OFFICE / TRAINING
GROUP S-1 (SECTION 311) - STORAGE

D. CONSTRUCTION TYPE: EXISTING
II-B (TABLE 601, IBC)

E. AUTOMATIC SPRINKLER SYSTEM: EXISTING – NOT PROVIDED.

F. ALLOWABLE BUILDING AREA: (GROSS) 17,500 SF (PER TABLE 503, IBC)
FRONTAGE INCREASE: 75%
TOTAL ALLOWABLE: 30,625 SF

ACTUAL BUILDING AREA: (GROSS) 19,271 SF
650 SF OVERHANG
(GROSS, AS MEASURED TO EXTERIOR FACE OF WALLS)

G. ALLOWABLE HEIGHT:
ALLOWABLE: 55 FEET (PER TABLE 503, IBC)
APPROXIMATE HEIGHT: 24 FEET

H. ALLOWABLE STORIES:
ALLOWABLE: 2 STORIES (PER TABLE 503, IBC)
ACTUAL STORIES: 1 STORIES

I. FIRE-RESISTANCE RATING REQUIREMENTS FOR EXTERIOR WALLS: 0 HOURS
(FIRE SEPARATION DISTANCE = GREATER THAN OR EQUAL TO 10' OR LESS THAN 30' PER TABLE 602, IBC)

J. CORRIDOR FIRE-RESISTANCE RATING: NOT REQUIRED. EXIT THROUGH INTERVENING SPACES.

K. INTERIOR WALL AND CEILING FINISH REQUIREMENTS BY OCCUPANCY (TABLE 803.9):
1. OCCUPANCY B:
EXIT ENCLOSURES AND EXIT PASSAGEWAYS FLAME SPREAD INDEX: A
CORRIDORS FLAME SPREAD INDEX: B
ROOMS AND ENCLOSED SPACES FLAME SPREAD INDEX: C

L. MINIMUM ROOF COVERING CLASSIFICATION: CLASS C (TABLE 1505.1, IBC)

P. MAXIMUM DISTANCE, COMMON PATH OF EGRESS TRAVEL (SECTION 1014.3, IBC): 75 FT

ACTUAL TRAVEL DISTANCE: 66 FT

Q. MAXIMUM OCCUPANT LOAD FOR SPACES WITH ONE EXIT OR EXIT ACCESS DOORWAY (TABLE 1015.1): 49

ACTUAL OCCUPANT LOAD (EXITING): 205
ACTUAL NUMBER OF EXITS: 3

R. MINIMUM NUMBER OF REQUIRED PLUMBING FIXTURES (TABLE 2902.1, IBC)
1. (S-1; 13,042 GSF)
OCCUPANT LOAD = 27 OCCUPANTS
(INCLUDED WITH B OCCUPANCY)
2. (B; 6,229 GSF)
OCCUPANT LOAD = 63 OCCUPANTS
TOTAL = 45 MALE, 45 FEMALE

WATER CLOSET REQUIRED, MALE (1/25)	= 2
WATER CLOSET REQUIRED, FEMALE (1/25)	= 2
LAVATORIES REQUIRED, MALE (1/40)	= 2
LAVATORIES REQUIRED, FEMALE (1/40)	= 2
DRINKING FOUNTAINS REQUIRED (1/100) (FOOTNOTE f, TABLE 2902.1, IBC)	= 2
SERVICE SINK REQUIRED	= 1

2. TOTAL PLUMBING FIXTURES PROVIDED:

WATER CLOSET, MALE	= 2
WATER CLOSET, FEMALE	= 2
LAVATORIES, MALE	= 2
LAVATORIES, FEMALE	= 2
SERVICE SINK	= 1

OWNER

OTERO COUNTY EMERGENCY SERVICES — OWNER
1101 NEW YORK AVE.
ALAMOGORDO, NM 88310
(575) 437-7427
(575) 437-2259 FAX
CONTACT: PAUL QUAIROLI, EMERGENCY SERVICES DIRECTOR

ARCHITECT

WILSON & COMPANY — ARCHITECT
4900 LANG AVENUE, NORTHEAST
ALBUQUERQUE, NM 87109
(505) 348-4000
(505) 348-4055 FAX
CONTACT: LARRY MCDONALD

CONSULTANTS / ENGINEERS

WILSON & COMPANY — M/E/P
4900 LANG AVENUE, NORTHEAST
ALBUQUERQUE, NM 87109
(505) 348-4000
(505) 348-4055 FAX
CONTACT: CONTACT: MARK WENTZEL, PE

WILSON & COMPANY
4900 LANG AVENUE NE
ALBUQUERQUE, NM 87109
PHONE: (505) 348-4000

CONSULTANTS

SEAL: STATE OF NEW MEXICO — LAWRENCE D. McDONALD No. 4238 — REGISTERED ARCHITECT — 07-24-15

PROJECT NAME: OTERO COUNTY EMERGENCY OPERATIONS CENTER ALAMOGORDO, NM

MARK	DATE	DESCRIPTION
-	07-24-15	PERMIT DOCUMENTS

PROJECT NO: 1560020401
DRAWN BY SLW
CHECKED BY TJR
SHEET TITLE: COVER SHEET

G-001
SHEET 1 OF 21

7/24/2015 9:47:17 AM

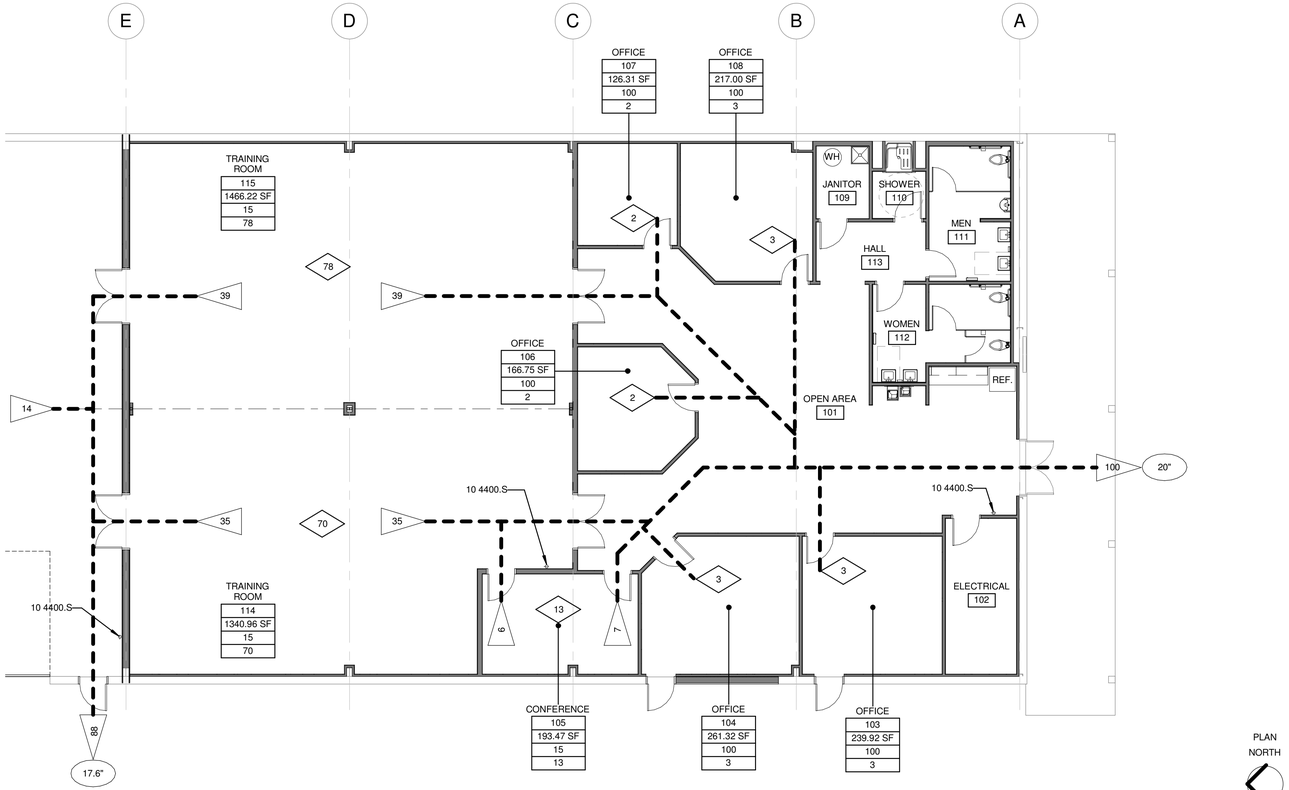

E3 CODE REVIEW OFFICE / TRAINING

1/8" = 1'-0"

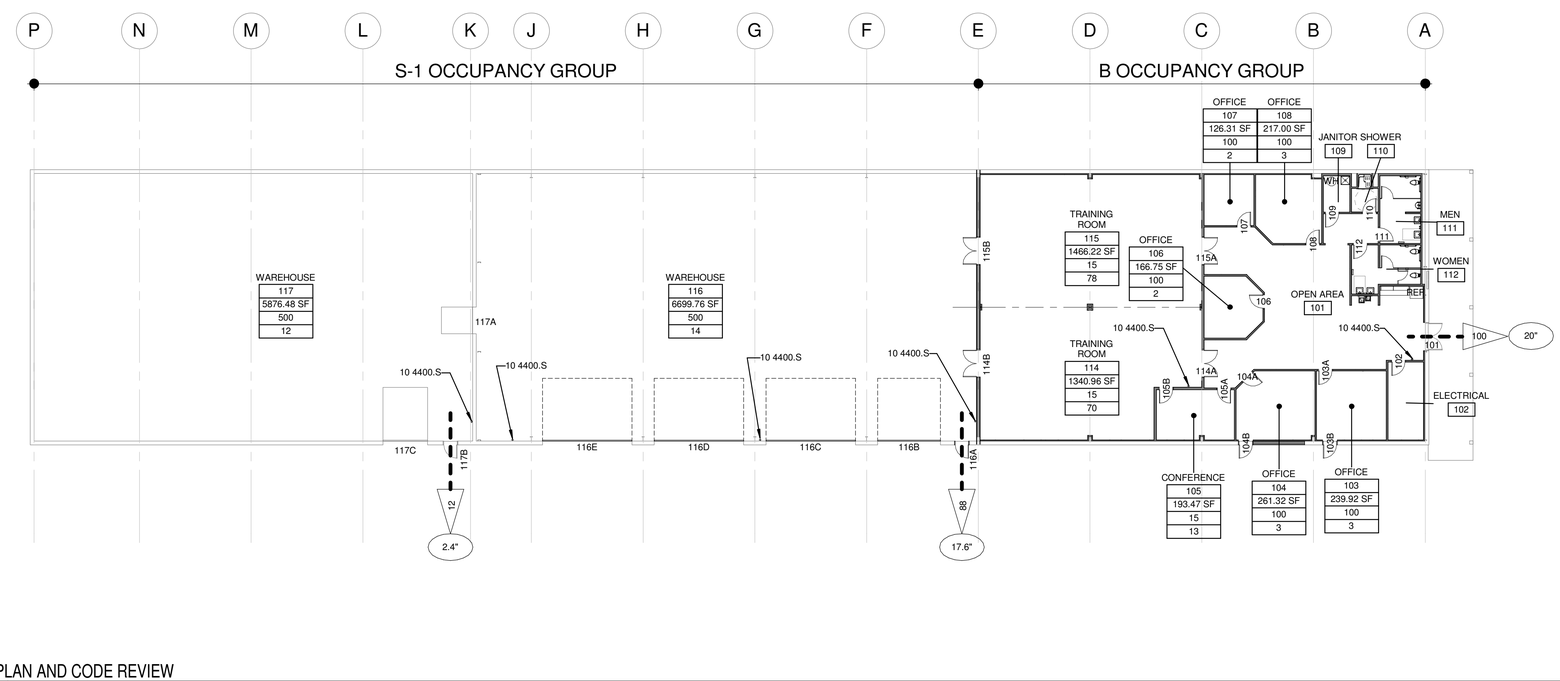

A1 OVERALL FLOOR PLAN AND CODE REVIEW

1/16" = 1'-0"

GENERAL SHEET NOTES

REFERENCE KEYNOTES

10 4400.S SURFACE MOUNTED FIRE EXTINGUISHER

LEGEND

SYMBOL/ABBREVIATION:	DESCRIPTION	SPECIFICATION SECTION
	PATH OF EGRESS	
0.00"	REQUIRED EGRESS WIDTH	
0.00	ACCUMULATED OCCUPANT LOAD IN DIRECTION OF EGRESS	
0.00	IBC 2009 OCCUPANT LOAD	
RM NAME / RM # / RM SF / SF FACTOR / OCC LOAD	INDIVIDUAL ROOM CODE INFORMATION	

WILSON & COMPANY
4900 LANG AVENUE NE
ALBUQUERQUE, NM 87109
PHONE: (505) 348-4000

CONSULTANTS

SEAL: STATE OF NEW MEXICO — LAWRENCE D. McDONALD No. 4238 — REGISTERED ARCHITECT — 07-24-15

PROJECT NAME: OTERO COUNTY EMERGENCY OPERATIONS CENTER ALAMOGORDO, NM

MARK	DATE	DESCRIPTION
-	07-24-15	PERMIT DOCUMENTS

PROJECT NO: 1560020401

DRAWN BY SLW

CHECKED BY TJR

SHEET TITLE: OVERALL FLOOR PLAN AND CODE REVIEW

A-101

SHEET 2 OF 21

7/24/2015 9:49:10 AM

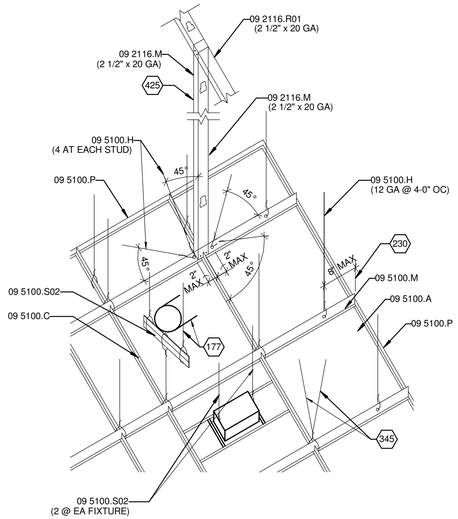

F1 SEISMIC BRACING AT SUSPENDED CEILING SYSTEM

3/4" = 1'-0"

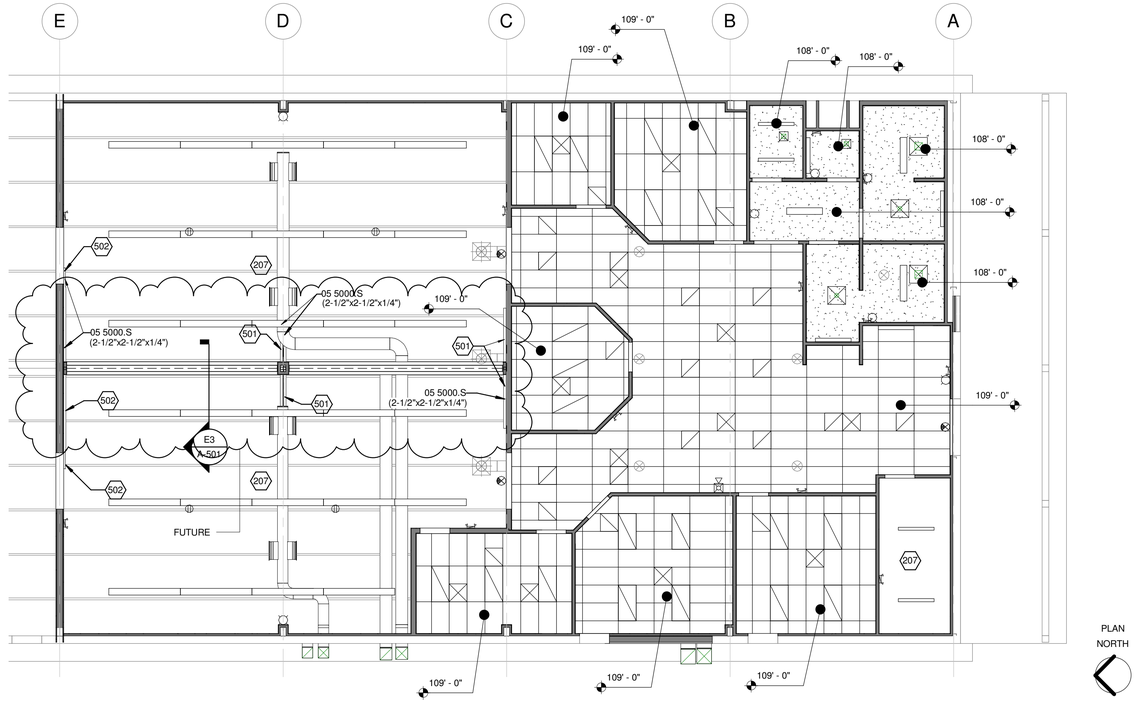

E4 REFLECTED CEILING PLAN - OFFICE / TRAINING AREA

1/8" = 1'-0"

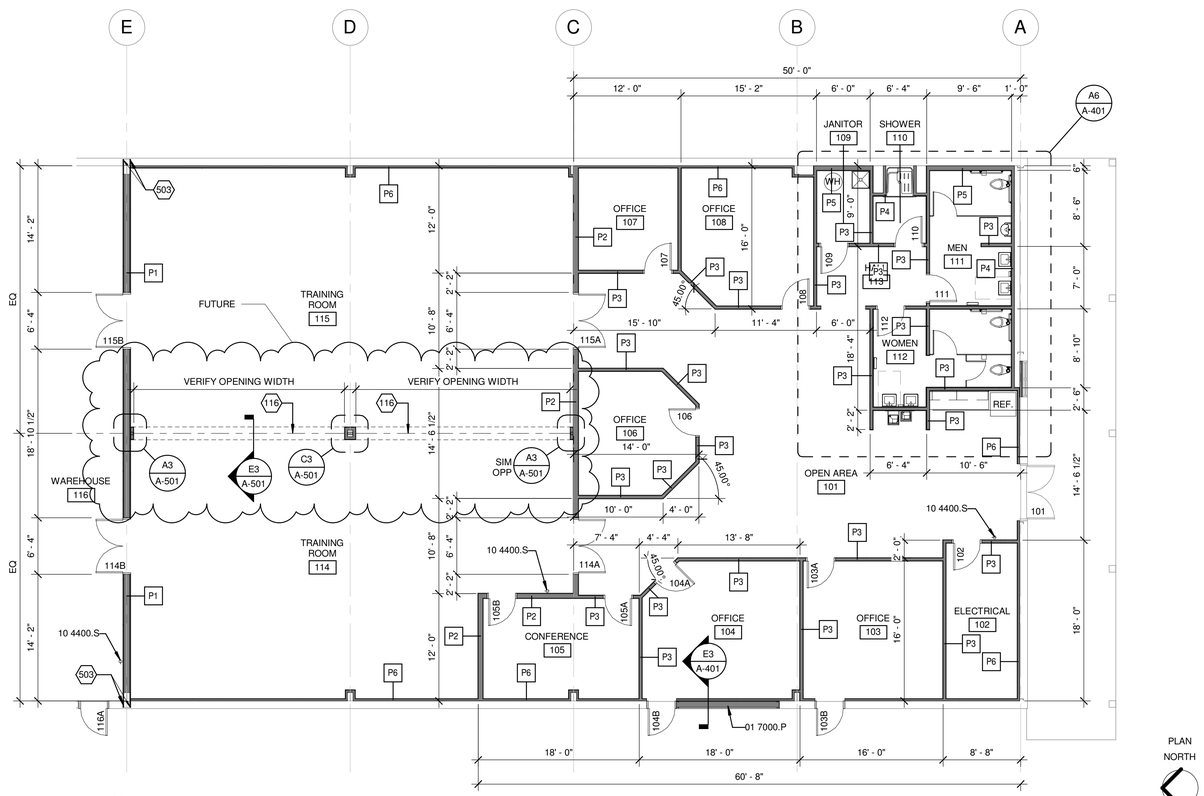

A4 FLOOR PLAN - OFFICE / TRAINING AREA

1/8" = 1'-0"

GENERAL SHEET NOTES

1. DIMENSIONS TO INTERIOR PARTITIONS ARE TO FACE OF STUD UNLESS INDICATED OTHERWISE.
2. REFER TO SHEET A-601 FOR ROOM FINISH SCHEDULE.
3. REFER TO MECHANICAL PLAN FOR CEILING GRILL TYPES.
4. REFER TO ELECTRICAL LIGHTING PLAN FOR CEILING FIXTURE TYPES.

REFERENCE KEYNOTES

01 7000.P	PATCH WALL TO MATCH EXISTING
05 5000.S	STEEL ANGLE
09 2116.M	METAL STUD
09 2116.R01	REVEAL
09 5100.A	ACOUSTICAL PANEL(S)
09 5100.C	CROSS TEE
09 5100.H	HANGER WIRE
09 5100.M	MAIN BEAM
09 5100.P	PERIMETER MOLDING
09 5100.S02	SUPPORT HANGER
10 4400.S	SURFACE MOUNTED FIRE EXTINGUISHER

SHEET KEYNOTES

116	CENTERLINE INDICATES CENTER OF FOLDING PARTITION.
177	DO NOT BEND HANGER WIRE AROUND INTERFERING EQUIPMENT OR PIPING.
207	EXPOSED CONSTRUCTION.
230	FACE OF WALL.
345	PROVIDE COUNTERSLOPED SUPPORT HANGER IF HANGER WIRE MUST BE SPLAYED MORE THAN 1 IN 6 OUT OF PLUMB.
425	SEISMIC BRACING (METAL STUD): LOCATE 12'-0" ON CENTER EACH WAY AND 6'-0" FROM WALLS.
501	PROVIDE ANGLED BRACE AT EACH COLUMN, FROM TOP OF BEAM TO STEEL FRAME ABOVE.
502	PROVIDE STEEL FRAMING TO UNDERSIDE OF EXISTING ROOF PURLINS AS REQUIRED TO ATTACH ANGLED BRACE.
503	EXTEND ALL LAYERS OF FIRE-RATED GYPSUM BOARD TO INTERIOR FACE OF WALL PANEL.

LEGEND

- ITEMS TO REMAIN
- DOOR TAG AND SYMBOL
- P- PARTITION TAG
- 0' - 0" DENOTES CEILING / SOFFIT / BULKHEAD HEIGHT ABOVE FINISHED FLOOR
- 2' x 4' ACP - REFER TO FINISH SCHEDULE
- GYPSUM BOARD - REFER TO FINISH SCHEDULE
- MECHANICAL GRILLE - REFER TO MECHANICAL
- RECESSED RETURN AIR - REFER TO MECHANICAL
- RECESSED FLUORESCENT LIGHT FIXTURE - REFER TO ELECTRICAL
- RECESSED CAN LIGHT FIXTURE - REFER TO ELECTRICAL

WILSON & COMPANY
4900 LANG AVENUE NE
ALBUQUERQUE, NM 87109
PHONE: (505) 348-4000

CONSULTANTS

SEAL: STATE OF NEW MEXICO — LAWRENCE D. McDONALD No. 4238 — REGISTERED ARCHITECT — 07-24-15

PROJECT NAME: OTERO COUNTY EMERGENCY OPERATIONS CENTER ALAMOGORDO, NM

MARK	DATE	DESCRIPTION
1	07-24-15	PERMIT DOCUMENTS
-	Date 1	Revision 1

PROJECT NO: 1560020401

DRAWN BY SLW

CHECKED BY TJR

SHEET TITLE: FLOOR AND REFLECTED CEILING PLANS

A-102

SHEET 3 OF 21

7/24/2015 9:49:52 AM

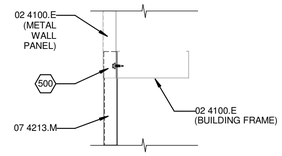

G1 METAL WALL PANEL DETAIL
1 1/2" = 1'-0"

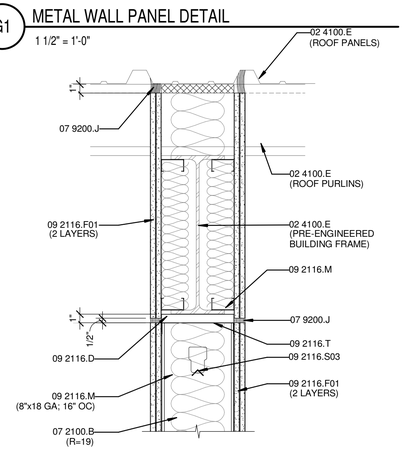

E1 FRAMING DETAIL
1 1/2" = 1'-0"

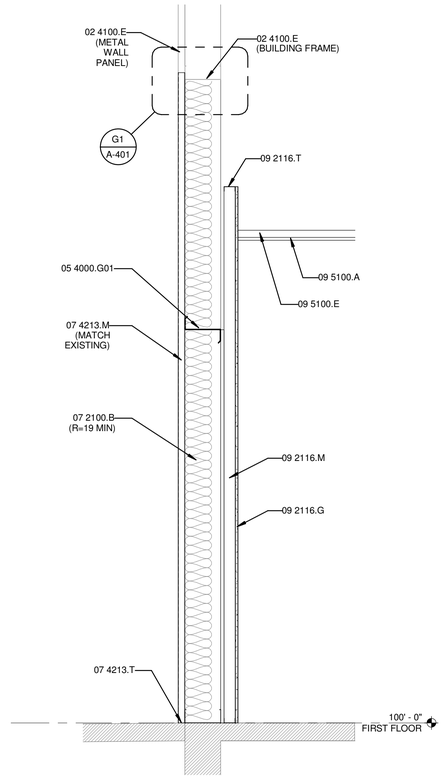

E3 SECTION AT WALL IN-FILL
3/4" = 1'-0"

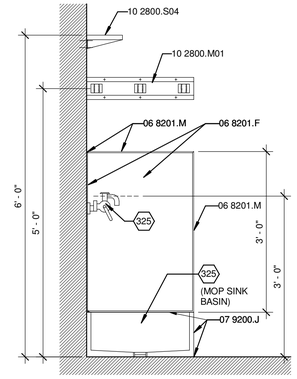

G5 MOP SINK SECTION
3/4" = 1'-0"

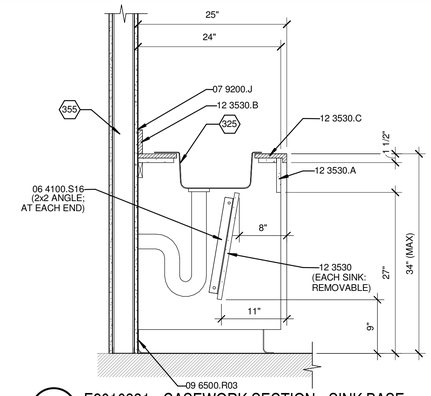

G7 E2010331 - CASEWORK SECTION - SINK BASE
1" = 1'-0"

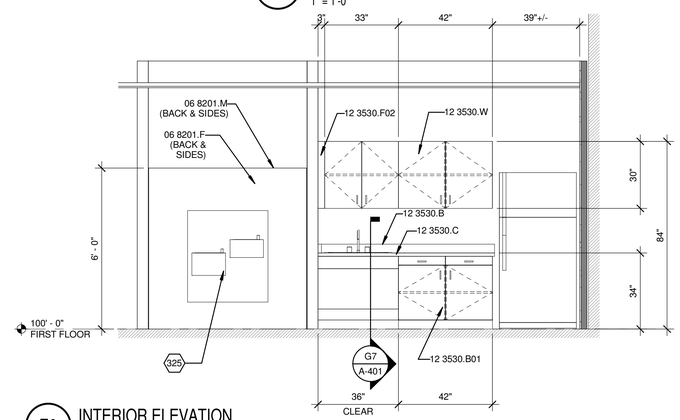

E6 INTERIOR ELEVATION
3/8" = 1'-0"

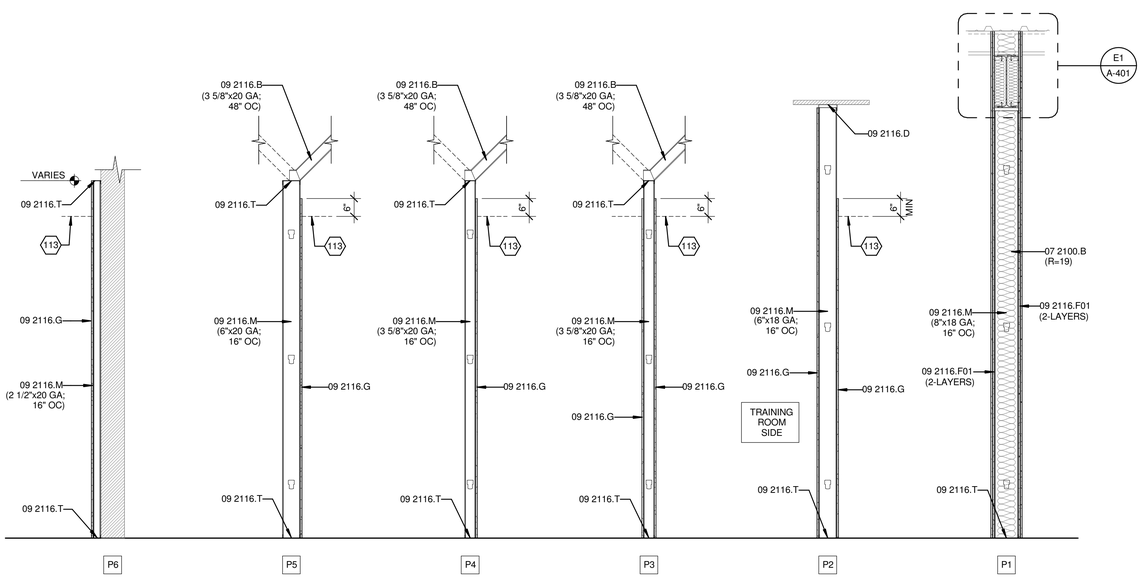

A1 PARTITION TYPES
1/2" = 1'-0"

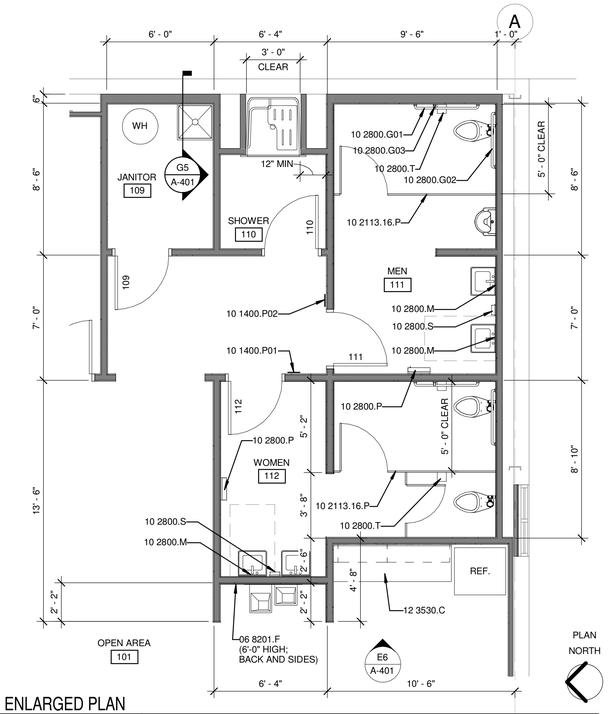

A6 ENLARGED PLAN
1/4" = 1'-0"

GENERAL SHEET NOTES

1. DIMENSIONS TO INTERIOR PARTITIONS ARE TO FACE OF STUD UNLESS INDICATED OTHERWISE.
2. REFER TO SHEET A-601 FOR ROOM FINISH SCHEDULE.

REFERENCE KEYNOTES

02 4100.E	EXISTING TO REMAIN
05 4000.G01	GIRT
06 4100.S16	SUPPORT BRACKET
06 8201.F	FIBERGLASS REINFORCED PLASTIC (FRP) PANEL
06 8201.M	MOLDING
07 2100.B	BLANKET INSULATION
07 4213.M	METAL WALL PANEL
07 4213.T	TRIM
07 9200.J	JOINT SEALANT
09 2116.B	BRACE
09 2116.D	DEEP LEG TRACK
09 2116.F01	FIRE RATED GYPSUM BOARD
09 2116.G	GYPSUM BOARD
09 2116.M	METAL STUD
09 2116.S03	SPACING BAR
09 2116.T	TRACK
09 5100.A	ACOUSTICAL PANEL(S)
09 5100.E	EXPOSED SUSPENSION SYSTEM
09 6500.R03	RESILIENT BASE
10 1400.P01	PLASTIC SIGN TYPE "A"
10 1400.P02	PLASTIC SIGN TYPE "B"
10 2113.16.P	PLASTIC-LAMINATE-CLAD TOILET COMPARTMENT
10 2800.G01	GRAB BAR TYPE "A"
10 2800.G02	GRAB BAR TYPE "B"
10 2800.G03	GRAB BAR TYPE "C"
10 2800.M	MIRROR
10 2800.M01	MOP AND BROOM HOLDER
10 2800.P	PAPER TOWEL DISPENSER
10 2800.S	SOAP DISPENSER
10 2800.S04	STORAGE SHELF
10 2800.T	TOILET PAPER DISPENSER
12 3530	RESIDENTIAL CASEWORK
12 3530.A	APRON
12 3530.B	BACKSPLASH
12 3530.B01	BASE CABINET
12 3530.C	COUNTERTOP
12 3530.F02	FILLER
12 3530.W	WALL CABINET

SHEET KEYNOTES

113	CEILING AS SCHEDULED.
325	PLUMBING FIXTURE.
355	REFER TO PLANS FOR WALL CONSTRUCTION.
500	INSTALL NEW METAL WALL PANEL UNDER EXISTING METAL WALL PANEL.

WILSON & COMPANY
4900 LANG AVENUE NE
ALBUQUERQUE, NM 87109
PHONE: (505) 348-4000

CONSULTANTS

SEAL: STATE OF NEW MEXICO — LAWRENCE D. McDONALD No. 4238 — REGISTERED ARCHITECT — 07-24-15

PROJECT NAME: OTERO COUNTY EMERGENCY OPERATIONS CENTER ALAMOGORDO, NM

MARK	DATE	DESCRIPTION
-	07-24-15	PERMIT DOCUMENTS

PROJECT NO: 1560020401
DRAWN BY SLW
CHECKED BY TJR
SHEET TITLE: ENLARGED PLANS & DETAILS

A-401
SHEET 4 OF 21

7/24/2015 9:50:48 AM

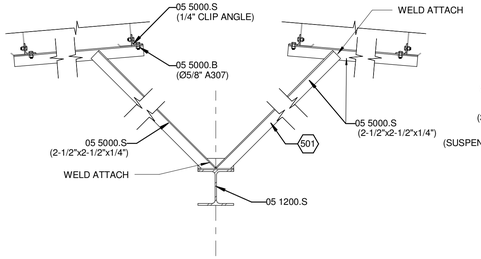

E1 BRACE DETAIL
3/4" = 1'-0"

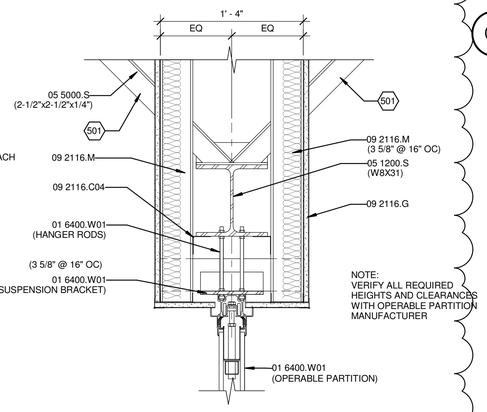

NOTE:
VERIFY ALL REQUIRED HEIGHTS AND CLEARANCES WITH OPERABLE PARTITION MANUFACTURER

E3 OPERABLE PARTITION - HEAD
1 1/2" = 1'-0"

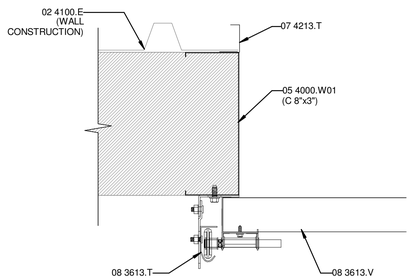

G5 EXTERIOR SECTIONAL DOOR DETAIL - JAMB
3" = 1'-0"

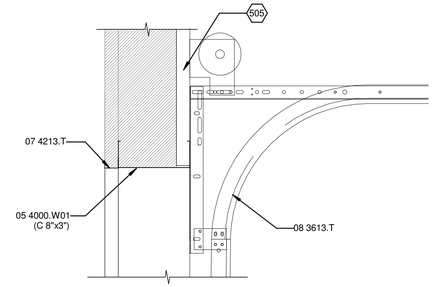

G7 EXTERIOR SECTIONAL DOOR DETAIL - HEAD
1 1/2" = 1'-0"

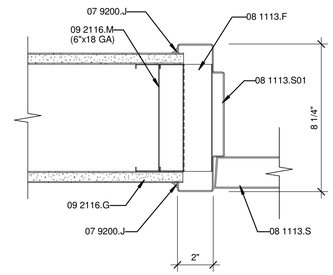

E5 INTERIOR HM DOOR DETAIL - JAMB
3" = 1'-0"

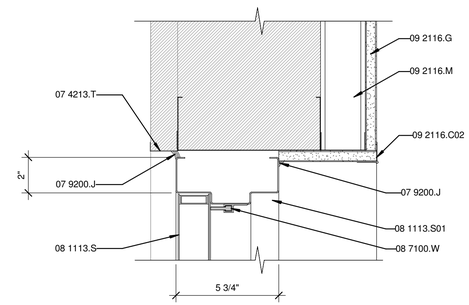

E7 EXTERIOR HM DOOR DETAIL - HEAD
3" = 1'-0"

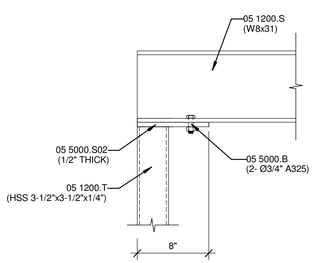

C1 BEAM / COLUMN
1 1/2" = 1'-0"

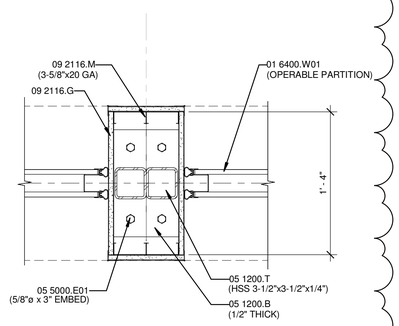

C3 OPERABLE PARTITION - JAMB AT CENTER COLUMNS
1 1/2" = 1'-0"

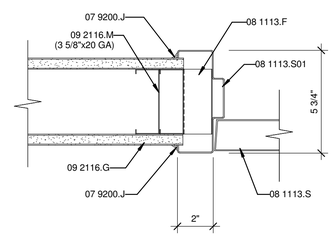

C5 INTERIOR HM DOOR DETAIL - JAMB
3" = 1'-0"

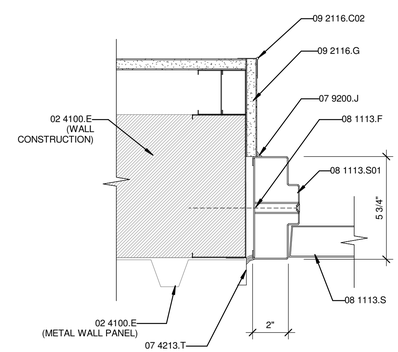

C7 EXTERIOR HM DOOR DETAIL - JAMB
3" = 1'-0"

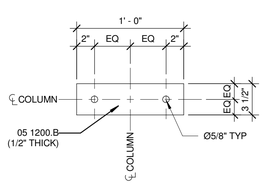

A1 COLUMN BASE PLATE
1 1/2" = 1'-0"

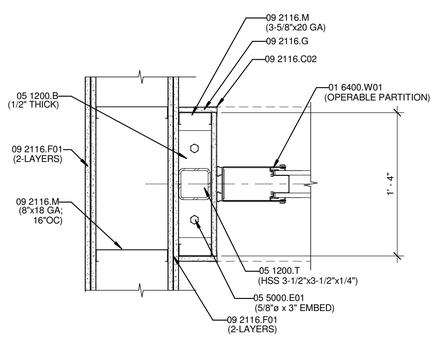

A3 OPERABLE PARTITION - JAMB
1 1/2" = 1'-0"

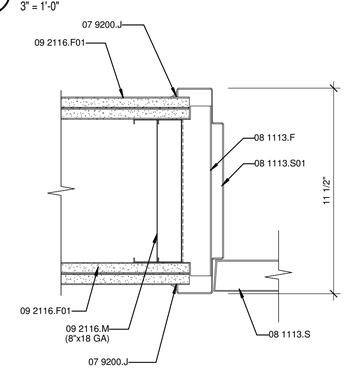

A5 INTERIOR HM DOOR DETAIL - JAMB
3" = 1'-0"

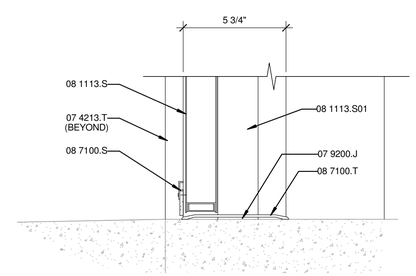

A7 EXTERIOR HM DOOR DETAIL - SILL
3" = 1'-0"

REFERENCE KEYNOTES

01 6400.W01	OWNER-FURNISHED, CONTRACTOR-INSTALLED ITEM
02 4100.E	EXISTING TO REMAIN
05 1200.B	BASE PLATE
05 1200.S	STEEL BEAM
05 1200.T	TUBE STEEL COLUMN
05 4000.W01	WALL FRAMING
05 5000.B	BOLT
05 5000.E01	EXPANSION ANCHOR
05 5000.S	STEEL ANGLE
05 5000.S02	STEEL PLATE
07 4213.T	TRIM
07 9200.J	JOINT SEALANT
08 1113.F	FRAME ANCHOR
08 1113.S	STEEL DOOR
08 1113.S01	STEEL FRAME
08 3613.T	TRACK
08 3613.V	OVERHEAD DOOR
08 7100.S	SWEEP
08 7100.T	THRESHOLD
08 7100.W	WEATHERSTRIPPING
09 2116.C02	CORNER BEAD
09 2116.C04	CLIP ANGLE
09 2116.F01	FIRE RATED GYPSUM BOARD
09 2116.G	GYPSUM BOARD
09 2116.M	METAL STUD

SHEET KEYNOTES

501	PROVIDE ANGLED BRACE AT EACH COLUMN, FROM TOP OF BEAM TO STEEL FRAME ABOVE.
505	PROVIDE BLOCKING AS REQUIRED BY DOOR MANUFACTURER.

WILSON & COMPANY
4900 LANG AVENUE NE
ALBUQUERQUE, NM 87109
PHONE: (505) 348-4000

CONSULTANTS

SEAL
STATE OF NEW MEXICO
LAWRENCE D. McDONALD
No. 4238
REGISTERED ARCHITECT
07-24-15

PROJECT NAME:
OTERO COUNTY
EMERGENCY OPERATIONS CENTER
ALAMOGORDO, NM

MARK	DATE	DESCRIPTION
1	Date 1	Revision 1
-	07-24-15	PERMIT DOCUMENTS

PROJECT NO: 1560020401
DRAWN BY SLW
CHECKED BY TJR
SHEET TITLE
DETAILS

A-501
SHEET 5 OF 21

7/24/2015 9:51:23 AM

DOOR SCHEDULE

DOOR MARK	DOOR QTY	DOOR SIZE W	DOOR SIZE H	DOOR SIZE THK	DOOR MATL	DOOR EL	DOOR LOUVER W	DOOR LOUVER H	DOOR FRAME EL	DOOR FRAME MATL	DOOR DETAILS HEAD	DOOR DETAILS JAMB	DOOR DETAILS SILL	FIRE RATING LABEL	SET NO	KEYSIDE	NOTES
101	2	3' - 0"	7' - 0"	1 3/4"	EXIST	EXIST	-	-	EXIST	EXIST	-	-	-	-	HDW 1.0	EXTERIOR	
102	1	3' - 0"	7' - 0"	1 3/4"	WD	F	-	-	DF1	HM	SIM C5 / A-501	C5 / A-501	-	-	HDW 2.0	101	
103A	1	3' - 0"	7' - 0"	1 3/4"	WD	F	-	-	DF1	HM	SIM C5 / A-501	C5 / A-501	-	-	HDW 3.0	101	
103B	1	3' - 0"	7' - 0"	1 3/4"	HM	F	-	-	DF1	HM	E7 / A-501	C7 / A-501	A7 / A-501	-	HDW 4.0	EXTERIOR	
104A	1	3' - 0"	7' - 0"	1 3/4"	WD	F	-	-	DF1	HM	SIM C5 / A-501	C5 / A-501	-	-	HDW 3.0	101	
104B	1	3' - 0"	7' - 0"	1 3/4"	HM	F	-	-	DF1	HM	E7 / A-501	C7 / A-501	A7 / A-501	-	HDW 4.0	EXTERIOR	
105A	1	3' - 0"	7' - 0"	1 3/4"	WD	F	-	-	DF1	HM	SIM C5 / A-501	C5 / A-501	-	-	HDW 5.0	101	
105B	1	3' - 0"	7' - 0"	1 3/4"	WD	F	-	-	DF1	HM	SIM E5 / A-501	E5 / A-501	-	-	HDW 5.0	114	
106	1	3' - 0"	7' - 0"	1 3/4"	WD	F	-	-	DF1	HM	SIM C5 / A-501	C5 / A-501	-	-	HDW 3.0	101	
107	1	3' - 0"	7' - 0"	1 3/4"	WD	F	-	-	DF1	HM	SIM C5 / A-501	C5 / A-501	-	-	HDW 3.0	101	
108	1	3' - 0"	7' - 0"	1 3/4"	WD	F	-	-	DF1	HM	SIM C5 / A-501	C5 / A-501	-	-	HDW 3.0	101	
109	1	3' - 0"	7' - 0"	1 3/4"	WD	F	-	-	DF1	HM	SIM C5 / A-501	C5 / A-501	-	-	HDW 2.0	113	
110	1	3' - 0"	7' - 0"	1 3/4"	WD	F	-	-	DF1	HM	SIM C5 / A-501	C5 / A-501	-	-	HDW 6.0	113	
111	1	3' - 0"	7' - 0"	1 3/4"	WD	F	-	-	DF1	HM	SIM C5 / A-501	C5 / A-501	-	-	HDW 7.0	-	
112	1	3' - 0"	7' - 0"	1 3/4"	WD	F	-	-	DF1	HM	SIM C5 / A-501	C5 / A-501	-	-	HDW 7.0	-	
114A	2	3' - 0"	7' - 0"	1 3/4"	WD	N	-	-	DF1	HM	SIM E5 / A-501	E5 / A-501	-	-	HDW 8.0	114	
114B	2	3' - 0"	7' - 0"	1 3/4"	HM	F	-	-	DF1	HM	SIM A5 / A-501	A5 / A-501	-	-	HDW 9.0	116	
115A	2	3' - 0"	7' - 0"	1 3/4"	WD	N	-	-	DF1	HM	SIM E5 / A-501	E5 / A-501		-	HDW 8.0	115	
115B	2	3' - 0"	7' - 0"	1 3/4"	HM	F	-	-	DF1	HM	SIM A5 / A-501	A5 / A-501	-	-	HDW 9.0	116	
116A	1	3' - 0"	7' - 0"	1 3/4"	HM	F			DF1	HM	E7 / A-501	C7 / A-501	A7 / A-501	-	HDW 4.0	EXTERIOR	
116B	1	14' - 0"	14' - 0"	2"	STEEL	OH	-	-	-	-	G7 / A-501	G5 / A-501	-	-	-	-	
116C	1	20' - 0"	14' - 0"	2"	STEEL	OH	-	-	-	-	G7 / A-501	G5 / A-501	-	-	-	-	
116D	1	20' - 0"	14' - 0"	2"	STEEL	OH	-	-	-	-	G7 / A-501	G5 / A-501	-	-	-	-	
116E	1	20' - 0"	14' - 0"	2"	STEEL	OH	-	-	-	-	G7 / A-501	G5 / A-501	-	-	-	-	
117A	1	6' - 0"	7' - 0"	1"	EXIST	OH	-	-	-	-	-	-	-	-	-	-	EXISTING TO REMAIN
117B	1	3' - 0"	7' - 0"	1 3/4"	EXIST	F			DF1	EXIST	-	-	-	-	-	-	EXISTING TO REMAIN
117C	1	10' - 0"	12' - 0"	2"	EXIST	OH	-	-	-	-	-	-	-	-	-	-	EXISTING TO REMAIN

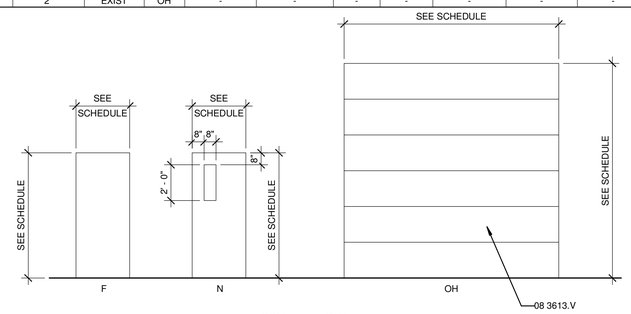

DOOR ELEVATIONS
1/4"=1'-0"

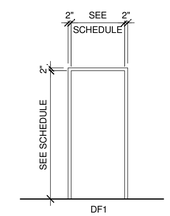

DOOR FRAME ELEVATION
1/4"=1'-0"

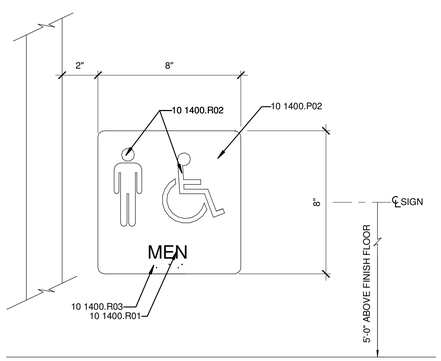

C2 PLASTIC SIGN TYPE "B"
3" = 1'-0"

FINISH SCHEDULE

ROOM NO	ROOM NAME	FLOOR	BASE	WALLS N	WALLS E	WALLS S	WALLS W	WAINSCOT	CEILING MATL	NOTES
101	OPEN AREA	SEALED CONC	RB	PT	PT	PT	PT	-	APC	
102	ELECTRICAL	SEALED CONC	RB	PT	PT	PT	PT	-	APC	
103	OFFICE	CT	RB	PT	PT	PT	PT	-	APC	
104	OFFICE	CT	RB	PT	PT	PT	PT	-	APC	
105	CONFERENCE	CT	RB	PT	PT	PT	PT	-	APC	
106	OFFICE	CT	RB	PT	PT	PT	PT	-	APC	
107	OFFICE	CT	RB	PT	PT	PT	PT	-	APC	
108	OFFICE	CT	RB	PT	PT	PT	PT	-	APC	
109	JANITOR	SEALED CONC	RB	PT	PT	PT	PT	-	GBC	
110	SHOWER	CTF	CTB	FRP	FRP	FRP	FRP	-	GBC	
111	MEN	CTF	CTB	FRP	FRP	FRP	FRP	-	GBC	
112	WOMEN	CTF	CTB	FRP	FRP	FRP	FRP	-	GBC	
113	HALL	SEALED CONC	RB	PT	PT	PT	PT	-	GBC	
114	TRAINING ROOM	SEALED CONC	RB	PT	PT	PT	PT	-	EXPOSED	
115	TRAINING ROOM	SEALED CONC	RB	PT	PT	PT	PT	-	EXPOSED	
116	WAREHOUSE	-	-	-	-	-	-	-	-	EXISTING TO REMAIN
117	WAREHOUSE	-	-	-	-	-	-	-	-	EXISTING TO REMAIN

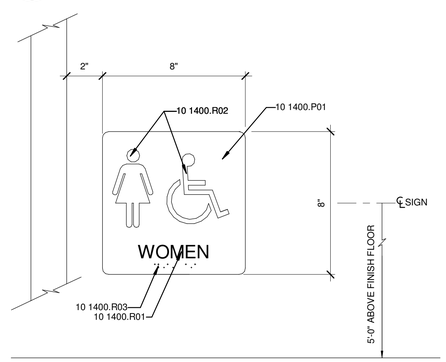

A2 PLASTIC SIGN TYPE "A"
3" = 1'-0"

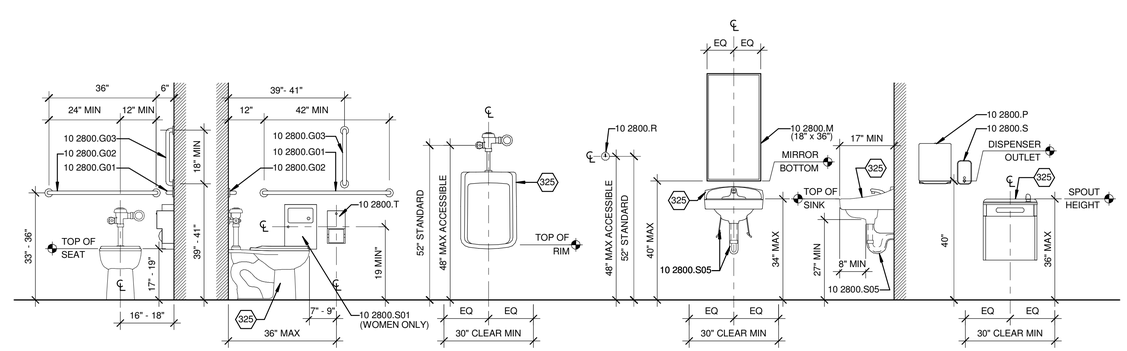

A4 FIXTURE MOUNTING HEIGHTS
1/2" = 1'-0"

GENERAL SHEET NOTES

1. PAINT HOLLOW METAL DOORS AND FRAMES IN ACCORDANCE WITH SPECIFICATION SECTION 09 9000.

REFERENCE KEYNOTES

08 3613.V	OVERHEAD DOOR
10 1400.P01	PLASTIC SIGN TYPE "A"
10 1400.P02	PLASTIC SIGN TYPE "B"
10 1400.R01	RAISED COPY
10 1400.R02	RAISED PICTOGRAM
10 1400.R03	RAISED BRAILLE
10 2800.G01	GRAB BAR TYPE "A"
10 2800.G02	GRAB BAR TYPE "B"
10 2800.G03	GRAB BAR TYPE "C"
10 2800.M	MIRROR
10 2800.P	PAPER TOWEL DISPENSER
10 2800.R	ROBE HOOK
10 2800.S	SOAP DISPENSER
10 2800.S01	SANITARY NAPKIN DISPOSAL UNIT
10 2800.S05	SAFETY COVER
10 2800.T	TOILET PAPER DISPENSER

SHEET KEYNOTES

325	PLUMBING FIXTURE.

LEGEND

DOOR SCHEDULE

SCHEDULE ITEM:	DESCRIPTION	SPECIFICATION SECTION
GENERAL:		
EL	ELEVATION	
H	HEIGHT	
MTRL	MATERIAL	
NA	NOT APPLICABLE	
NO	NUMBER	
THK	THICKNESS	
QTY	QUANTITY	
W	WIDTH	
MATERIAL:		
HM	HOLLOW METAL	08 1113
WD	WOOD DOOR	08 1416
SET NUMBER:		
HDW	HARDWARE	08 7100

FINISH SCHEDULE

SCHEDULE ITEM:	DESCRIPTION	SPECIFICATION SECTION
FLOOR:		
CT	CARPET TILE	09 6813
CTF	CERAMIC TILE FLOOR	09 3000
EP	EPOXY PAINT	09 9000
SEALED CONC	SEALED CONCRETE FLOOR	03 3000
BASE:		
RB	RESILIENT BASE	09 6500
CTB	CERAMIC TILE BASE	09 3000
WALLS:		
PT	PAINT	09 9000
CWT	CERAMIC WALL TILE	09 3000
FRP	FIBERGLASS REINFORCED PLASTIC PANEL	06 8201
CEILING:		
APC	ACOUSTICAL PANEL CEILING	09 5100
GBC	GYPSUM BOARD CEILING	09 2116

WILSON & COMPANY
4900 LANG AVENUE NE
ALBUQUERQUE, NM 87109
PHONE: (505) 348-4000

CONSULTANTS

SEAL: STATE OF NEW MEXICO LAWRENCE D. McDONALD No. 4238 REGISTERED ARCHITECT 07-24-15

PROJECT NAME: OTERO COUNTY EMERGENCY OPERATIONS CENTER ALAMOGORDO, NM

MARK	DATE	DESCRIPTION
-	07-24-15	PERMIT DOCUMENTS

PROJECT NO: 1560020401

DRAWN BY SLW

CHECKED BY TJR

SHEET TITLE
SCHEDULES & DETAILS

A-601

SHEET 6 OF 21

7/24/2015 9:52:05 AM

PLUMBING LEGEND

MARK	DEFINITION
CW	DOMESTIC COLD WATER TAG
	DOMESTIC COLD WATER LINE
HW	DOMESTIC HOT WATER TAG (110°F)
	DOMESTIC HOT WATER LINE (110°F)
HWR	HOT WATER RETURN TAG
	HOT WATER RETURN LINE
GAS	NATURAL GAS LINE
SS	SANITARY SEWER LINE
GT	GREASE TRAP LINE
V	SANITARY VENT LINE
CD	CONDENSATE DRAIN LINE
	PIPE DROP
	PIPE RISER
	PIPE HEADER
	END-OF LINE CLEANOUT
	FLOW DIRECTION
	RAG; LINE IS EXTENDED ELSEWHERE
	PLUMBING OFFSET (SCHEMATIC ONLY)
	FREEZE PROOF WALL HYDRANT
	BALANCING VALVE WITH PRESSURE PORTS (CIRCUIT SETTER)
	ISOLATION VALVE
	CONNECT TO EXISTING AT THIS POINT
	REMOVE PORTION OF WORK AND PROPERLY CAP AND SEAL
	SANITARY SEWER 90° TURN UTILIZING TWO 1/4 BENDS - THIS PREVENTS THE REQUIREMENT FOR A C.O.
	PIPING TO BE PART OF DEMOLITION
RS/RL	REFRIGERANT PIPING - SUCTION AND LIQUID

PLUMBING ABBREVIATIONS

ABBREVIATION	DEFINITION	ABBREVIATION	DEFINITION
AFF	ABOVE FINISHED FLOOR	LDBT	LEAVING DRY BULB TEMPERATURE
AFG	ABOVE FINISHED GRADE	LWBT	LEAVING WET BULB TEMPERATURE
AHJ	AUTHORITY HAVING JURISDICTION	LWT	LEAVING WATER TEMPERATURE
ARCH	ARCHITECT	MAT	MIXED AIR TEMPERATURE
C/C	COOLING COIL	MBH	THOUSAND BTU PER HOUR
CFH	CUBIC FEET PER HOUR	MCA	MINIMUM CIRCUIT AMPACITY
CFM	CUBIC FEET PER MINUTE	MH	MANHOLE
CL	CENTERLINE	MISC	MISCELLANEOUS
CLG	CEILING	MOCP	MAXIMUM OVERCURRENT PROTECTION
CO	CARBON MONOXIDE	NC	NOISE CRITERIA
CO	CLEANOUT	NEC	NATIONAL ELECTRICAL CODE
COTG	CLEANOUT TO GRADE	NFPA	NATIONAL FIRE PROTECTION ASSOCIATION
CO2	CARBON DIOXIDE	NTS	NOT TO SCALE
CU	CONDENSING UNIT	OA	OUTSIDE AIR
CW	COLD WATER	OFD	OVERFLOW DRAIN
DB	DRY BULB	PC	PLUMBING CONTRACTOR
DDC	DIRECT DIGITAL CONTROLS	PPM	PARTS PER MILLION
DEG F	DEGREES FAHRENHEIT	PRV	PRESSURE REDUCING VALVE
DS	DOWNSPOUT	PSI	POUNDS PER SQUARE INCH
DWH	DOMESTIC WATER HEATER	QA	QUALITY ASSURANCE
EC	ELECTRICAL CONTRACTOR	QC	QUALITY CONTROL
EDBT	ENTERING DRY BULB TEMPERATURE	R	RADIUS
EF	EXHAUST FAN	RA	RETURN AIR
EL	ELEVATION	RAT	RETURN AIR TEMPERATURE
ETC	ET CETERA	RD	ROOF DRAIN
EWBT	ENTERING WET BULB TEMPERATURE	RH	RELATIVE HUMIDITY
EWT	ENTERING WATER TEMPERATURE	RM	ROOM
FCO	FLOOR CLEAN-OUT	RPM	REVOLUTIONS PER MINUTE
FD	FLOOR DRAIN	RTU	ROOF TOP UNIT
FDC	FIRE DEPARTMENT CONNECTION	RV	RELIEF VALVE
FIN FLR	FINISHED FLOOR	SA	SUPPLY AIR
FH	FIRE HYDRANT	SD	STORM DRAIN
FPHB	FREEZE-PROOF HOSE BIBB	SF	SQUARE FOOT
FPM	FEET PER MINUTE	SHR	SHOWER
FPWH	FREEZE-PROOF WALL HYDRANT	SS	SANITARY SEWER
FS	FLOOR SINK	SS	SERVICE SINK
GALV	GALVANIZED	SUB	SUBSTITUTE
GAS	NATURAL GAS	TG	TRAP GUARD
GC	GENERAL CONTRACTOR	TP	TRAP PRIMER
GCO	GRADE CLEANOUT	TSTAT	THERMOSTAT
GPD	GALLONS PER DAY	TYP	TYPICAL
GPM	GALLONS PER MINUTE	UNO	UNLESS NOTED OTHERWISE
GT	GREASE TRAP	UR	URINAL
HB	HOSE BIBB	V	VENT
HC	HEATING COIL	VIF	VERIFY IN FIELD
HD	HEAVY DUTY	VOLT	VOLTAGE
HT	HEIGHT	W/	WITH
HW	HOT WATER	W/O	WITHOUT
HWR	HOT WATER RETURN	WB	WET BULB
HWS	HOT WATER SUPPLY	WC	WATER CLOSET
IBC	INTERNATIONAL BUILDING CODE	WCO	WALL CLEANOUT
I/O	INPUT/OUTPUT	WH	WALL HYDRANT
LAT	LEAVING AIR TEMPERATURE	WHA	WATER HAMMER ARRESTOR

GENERAL PLUMBING NOTES/REQUIREMENTS:

1. UNLESS OTHERWISE NOTED, THE WORK DESCRIBED ON THE PLANS AND SPECIFICATIONS SHALL INCLUDE THE FURNISHING AND INSTALLATION OF ALL LABOR AND MATERIALS NECESSARY FOR COMPLETE AND OPERATIONAL HVAC AND PLUMBING SYSTEMS. CONTRACTOR SHALL FURNISH THESE EVEN IF ITEMS REQUIRED TO ACHIEVE THIS (I.E. OFFSETS, ISOLATION AND BALANCING DEVICES, MAINTENANCE CLEARANCES, ETC.) ARE NOT SPECIFICALLY SHOWN.

2. DATA GIVEN ON THE DRAWINGS IS AS EXACT AS COULD BE SECURED. ABSOLUTE ACCURACY IS NOT GUARANTEED AND THE CONTRACTOR SHALL OBTAIN AND VERIFY EXACT LOCATIONS, MEASUREMENTS, LEVELS, SPACE REQUIREMENTS, POTENTIAL CONFLICTS WITH OTHER TRADES, ETC. AT THE SITE AND SHALL SATISFACTORILY ADAPT HIS WORK TO ACTUAL CONDITIONS AT THE BUILDINGS. THE DRAWINGS ARE DIAGRAMMATICAL IN NATURE AND SHALL NOT BE SCALED. HOWEVER, THIS DOES NOT RELIEVE ANY SUB-CONTRACTOR FROM COORDINATING HIS WORK WITH ALL OTHER TRADES AND FROM ADJUSTING HIS WORK AS REQUIRED BY THE ACTUAL CONDITIONS OF THE PROJECT. THE CONTRACTOR SHALL VISIT THE SITE BEFORE SUBMITTING A BID TO BECOME THOROUGHLY FAMILIAR WITH THE ACTUAL CONDITIONS OF THE PROJECT.

3. COORDINATE AND ADJUST ALL WORK BETWEEN TRADES AND EXISTING CONDITIONS IN ORDER TO ACCOMPLISH A NEAT, INTEGRATED AND EFFICIENT INSTALLATION. EXAMINE THE CONTRACT DOCUMENTS OF ALL TRADES (I.E. THE ARCHITECTURAL REFLECTED CEILING PLAN, ELECTRICAL LIGHTING PLAN, ETC.). COORDINATE NECESSARY EQUIPMENT, DUCTWORK AND PIPING LOCATIONS SO THAT THE FINAL INSTALLATION IS COMPATIBLE WITH THE MATERIALS AND EQUIPMENT OF THE OTHER TRADES. PREPARE SHOP DRAWINGS FOR INSTALLATION OF ALL NEW WORK BEFORE INSTALLATION TO VERIFY COORDINATION OF WORK BETWEEN TRADES.

4. ALL CAPACITIES ARE SCHEDULED AT JOBSITE ALTITUDE OF 6,570 FT.

5. VERIFY THE ELECTRICAL SERVICE PROVIDED BY THE ELECTRICAL CONTRACTOR BEFORE ORDERING ANY MECHANICAL EQUIPMENT REQUIRING ELECTRICAL CONNECTIONS.

6. SUSPEND EACH TRADE'S WORK SEPARATELY FROM THE STRUCTURE. DUCTWORK SHALL BE HELD TIGHT TO STRUCTURE EXCEPT WHERE SHOWN.

7. INSTALL ALL EQUIPMENT AND MATERIALS IN ACCORDANCE WITH MANUFACTURER'S RECOMMENDATIONS UNLESS SPECIFICALLY INDICATED OTHERWISE OR WHERE LOCAL CODES OR REGULATIONS TAKE PRECEDENCE.

8. PROVIDE MANUFACTURER'S RECOMMENDED SERVICE CLEARANCE ALL AROUND ALL EQUIPMENT REQUIRING SAME.

9. PROVIDE FOR SAFE CONDUCT OF THE WORK, CAREFUL REMOVAL AND DISPOSITION OF MATERIALS AND PROTECTION OF PROPERTY WHICH IS TO REMAIN UNDISTURBED.

10. PROVIDE ACCESS DOORS FOR ALL EQUIPMENT. VALVES, CLEANOUTS, ACTUATORS AND CONTROLS WHICH REQUIRE ACCESS FOR ADJUSTMENT OR SERVICING AND WHICH ARE LOCATED IN OTHERWISE UNACCESSIBLE LOCATIONS. FOR EQUIPMENT LOCATED IN "ACCESSIBLE LOCATIONS" SUCH AS LAY-IN CEILINGS: LOCATE EQUIPMENT TO PROVIDE ADEQUATE SERVICE CLEARANCE FOR NORMAL MAINTENANCE WITHOUT REMOVING ARCHITECTURAL, ELECTRICAL OR STRUCTURAL ELEMENTS SUCH AS THE CEILING SUPPORT SYSTEM, ELECTRICAL FIXTURES, ETC. "NORMAL MAINTENANCE" INCLUDES, BUT IS NOT LIMITED TO: FILTER CHANGING; GREASING OF BEARINGS; USING P/T PORTS FOR PRESSURE OR TEMPERATURE MEASUREMENTS; SERVICING CONTROL VALVES AND SERVICING CONTROL PANELS.

11. NO DOMESTIC WATER, HEATING WATER OR CONDENSER WATER LINES SHALL BE LOCATED EXPOSED IN FINISHED SPACES OR BELOW THE BUILDING SLAB UNLESS SHOWN OTHERWISE ON THE DRAWINGS.

12. NO GAS LINES SHALL BE LOCATED BELOW BUILDING SLAB.

13. ALL CURBS, ROOF JACKS, ROOF THIMBLES, SANITARY VENTS, ROOF DRAINS, ETC. SHALL BE COMPATIBLE WITH ROOFING SYSTEM TO BE PROVIDED. REFERENCE ARCHITECTURAL DIVISION FOR REQUIRED FLASHING DETAILS.

14. THE ELECTRICAL POWER FOR CERTAIN EQUIPMENT PROVIDED UNDER MECHANICAL SPECIFICATIONS, HAS NOT BEEN SPECIFICALLY INDICATED ON THE ELECTRICAL DRAWINGS AND MUST BE FIELD COORDINATED BY THE DIVISION REQUIRING SUCH POWER. SUCH EQUIPMENT INCLUDES, BUT IS NOT LIMITED TO:
(A) TEMPERATURE CONTROL PANELS, AND JUNCTION BOXES FOR 24V CONTROL TRANSFORMERS. REQUIRED CONNECTION ARE INCLUDED IN MECHANICAL SPECIFICATIONS AND WILL BE SHOWN BY THAT CONTRACTOR'S CONTROL SUBMITTAL DRAWINGS.
(B) CONTRACTOR SHALL PROVIDE POWER TO THESE DEVICES AT NO EXTRA COST TO THE PROJECT. COORDINATE EXACT REQUIREMENTS AND COSTS WITH ENGINEER PRIOR TO SUBMITTING BID.

15. PROVIDE ALL REQUIRED PERMITS, INSPECTIONS AND COORDINATION WITH GOVERNING AUTHORITIES.

16. QUALITY CONTROL:
(A) QUALIFICATION OF PRODUCTS: WHEN PRODUCTS ARE SPECIFIED BY MANUFACTURER AND MODEL NUMBER, EQUIVALENT PRODUCTS BY OTHER MANUFACTURERS LISTED MAY BE PROVIDED. PRODUCT EQUIVALENCY SHALL BE DETERMINED BY ENGINEER.
(B) IF A PRODUCT SUBMITTED AS AN EQUIVALENT IS DEEMED UNACCEPTABLE TO THE ENGINEER, THE SPECIFIED PRODUCT SHALL BE PROVIDED AT NO EXTRA COST TO THE PROJECT.
(C) SUBMITTALS SHALL INCLUDE REVISED AND SUPPLEMENTED CONTROL DIAGRAMS.
(D) SUBMIT CUT-SHEETS ON ALL OF THE SPECIFIED EQUIPMENT.

17. CONTRACTOR SHALL CREATE A LOG SHEET FOR REQUIRED TESTS. THE LOG SHEET WILL HAVE A COLUMN FOR REQUIRED TESTS, A COLUMN FOR ACCEPTANCE OF TEST, A COLUMN FOR REMARKS, AND A COLUMN FOR APPROVAL SIGNATURE.

18. CONTRACTOR SHALL CREATE A LOG SHEET OF REQUIRED TRAINING. THE LOG SHEET WILL HAVE A COLUMN FOR THE TRAINED ITEM, A COLUMN FOR THE TIME, DATE AND DURATION OF THE TRAINING, AND A COLUMN FOR ACCEPTANCE OF TRAINING BY OWNER, ARCHITECT, OR ENGINEER.

19. AFTER INSTALLATION OF SYSTEM, PERFORM AN OPERATIONAL TEST IN THE PRESENCE OF THE OWNER, ARCHITECT, OR ENGINEER. THIS TEST WILL CONSIST OF SUCCESSFULLY DEMONSTRATING:
(A) APPEARANCE OF INSTALLATION.
(B) FUNCTION OF ALL CONTROLS.
(C) THE CONTROLS SHALL BE OPERATED IN THE FOLLOWING MODES IN EACH ZONE: OCCUPIED/UNOCCUPIED.
(D) IF THE TEST IS NOT SUCCESSFUL IN THE OPINION OF THE ARCHITECT OR ENGINEER, DEFICIENCIES WILL BE REMEDIED AND THE SYSTEM WILL BE RE-TESTED UNTIL THE TEST IS SUCCESSFUL. SECOND AND SUBSEQUENT TESTS WILL RESULT IN THE CONTRACTOR'S CONTRACT PAYMENT BEING REDUCED AN AMOUNT EQUAL TO 85 DOLLARS TIMES THE NUMBER OF ADDITIONAL HOURS SPENT BY THE ARCHITECT OR ENGINEER WITNESSING THE TEST.

20. WHERE NEW MECHANICAL SYSTEMS ARE USED FOR TEMPORARY VENTILATION OR CLIMATE CONTROL, MECHANICAL EQUIPMENT INSTALLER SHALL PROVIDE CONSTRUCTION FILTERS, MAINTAIN EQUIPMENT, AND CLEAN, ADJUST AND PUT IN NEW CONDITION BEFORE BUILDING OCCUPANCY. PARTS AND LABOR WARRANTY SHALL NOT BE CONSIDERED TO START UNTIL ACCEPTANCE OF THE SYSTEM BY OWNER.

21. PIPING:
(A) PIPE INSTALLATION:
(1) ALL PIPING SHALL BE ADEQUATELY SUPPORTED FROM THE BUILDING STRUCTURE TO PREVENT SAGGING, POCKETING, SWAYING OR DISPLACEMENT BY MEANS OF HANGERS AND SUPPORTS. PIPING IS NOT TO BE SUPPORTED BY EQUIPMENT.
(2) PROVIDE DIELECTRIC UNIONS BETWEEN DISSIMILAR MATERIALS.
(3) PROVIDE MANUAL AIR VENTS AND CAPPED HOSE-END DRAINS WITH ISOLATION VALVE AT PIPING HIGH AND LOW POINTS.
(4) WELD PIPE IN ACCORDANCE WITH APPLICABLE CODES AND STANDARDS. WELDERS SHALL BE CERTIFIED FOR TYPE OF WELD BEING PERFORMED.
(5) FLUSH OUT PIPING AND REMOVE CONTROL DEVICES BEFORE PERFORMING PRESSURE TEST. DO NOT USE PIPING SYSTEM VALVES TO ISOLATE SECTIONS WHERE TEST PRESSURE EXCEEDS VALVE PRESSURE RATING. PRESSURIZE PIPING AT 100 PSIG. IF LEAKAGE IS OBSERVED OR IF TEMPERATURE COMPENSATED PRESSURE DROP EXCEEDS 1% OF TEST PRESSURE, REPAIR LEAKS AND RETEST. DO NOT USE AIR PRESSURE TO TEST PLASTIC PIPE.
(6) PROVIDE SUPPORT UNDER ELBOWS ON PUMP SUCTION AND DISCHARGE LINES.
(7) ALL STRAINERS SHALL BE FURNISHED WITH A "ROUGHING" SCREEN AND TWO (2) SCREENS FOR NORMAL OPERATION. INSTALL STRAINER WITH ROUGHING SCREEN AND OPERATE SYSTEM FOR 24 HOURS MINIMUM (RUN DOMESTIC WATER SYSTEMS AT MAX FLOW FOR A MINIMUM OF ONE HALF (1/2) HOUR. REMOVE ROUGHING SCREEN AND INSTALL NORMAL SCREEN, AFTER TWO WEEKS OF NORMAL OPERATION INSTALL NEW NORMAL SCREEN.

22. ALL MATERIALS ABOVE THE CEILINGS WHERE THIS SPACE IS USED AS A RETURN AIR PLENUM MUST BE NON-COMBUSTIBLE. ALL COMMUNICATIONS CABLE MUST BE PLENUM RATED AND ALL ELECTRICAL WIRING MUST BE IN A PLENUM RATED SHEATH OR CONDUIT. ALL PVC PIPING MUST BE ENCASED IN AN APPROVED INSULATION WITH A FLAME AND SMOKE SPREAD RATING OF 25/50.

23. OWNER HAS FIRST RIGHT OF REFUSAL ON ALL EXISTING EQUIPMENT, FIXTURES, MATERIALS, ETC. BEING REMOVED AS PART OF THIS PROJECT.

WILSON & COMPANY
4900 LANG AVENUE NE
ALBUQUERQUE, NM 87109
PHONE: (505) 348-4000

CONSULTANTS

SEAL

MARK W. WENTZEL
NEW MEXICO
17012
LICENSED PROFESSIONAL ENGINEER
7-15-2015

PROJECT NAME:
OTERO COUNTY
EMERGENCY OPERATIONS CENTER
ALAMOGORDO, NM

MARK	DATE	DESCRIPTION
-	07-15-15	PERMIT DOCUMENTS

PROJECT NO: 15-600-204-01

DRAWN BY PJM

CHECKED BY MWW

SHEET TITLE
PLUMBING GENERAL NOTES & LEGENDS

P-001

SHEET ____ OF ____

7/20/2015 2:46:08 PM

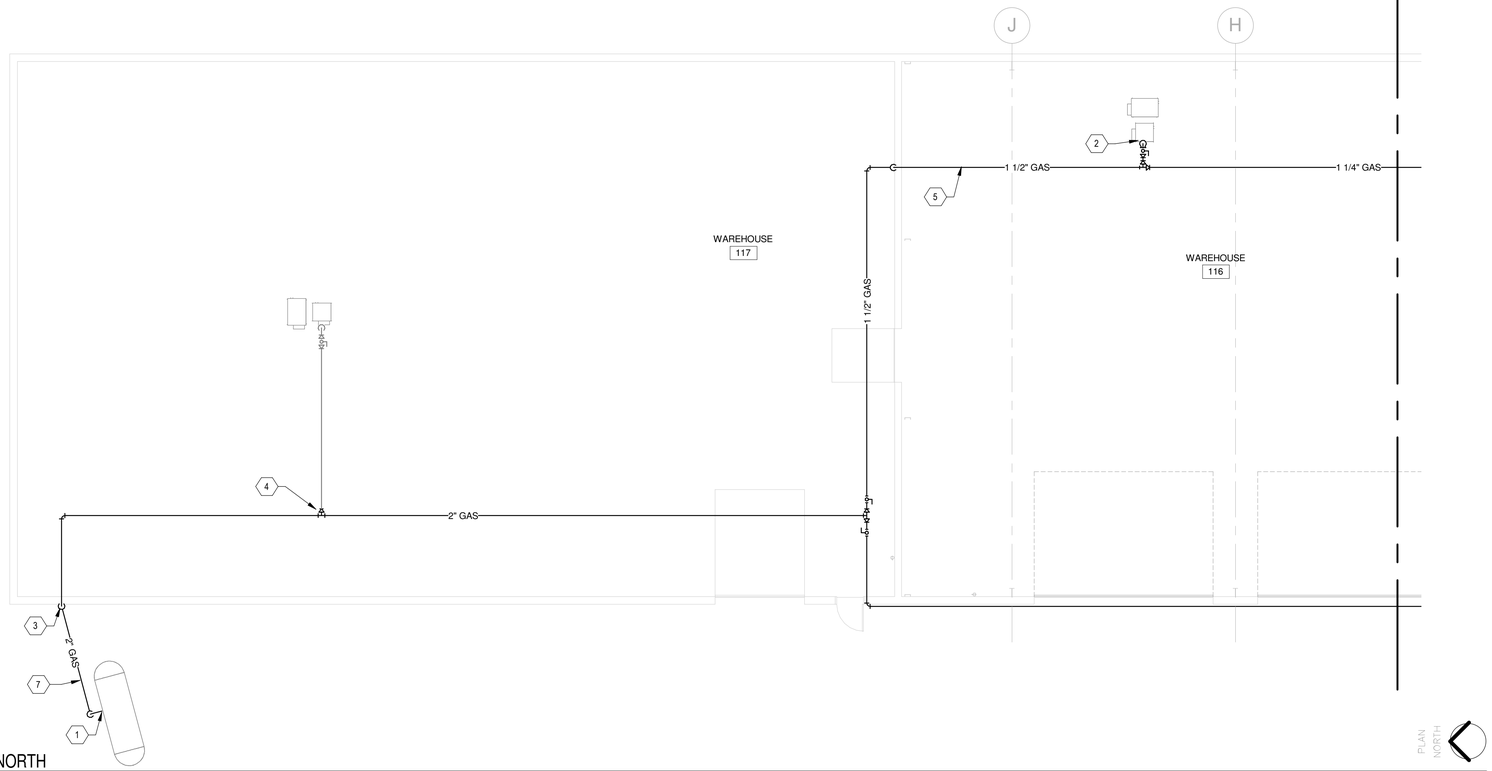

E1 PLUMBING WASTE & VENT PLAN - NORTH

1/8" = 1'-0"

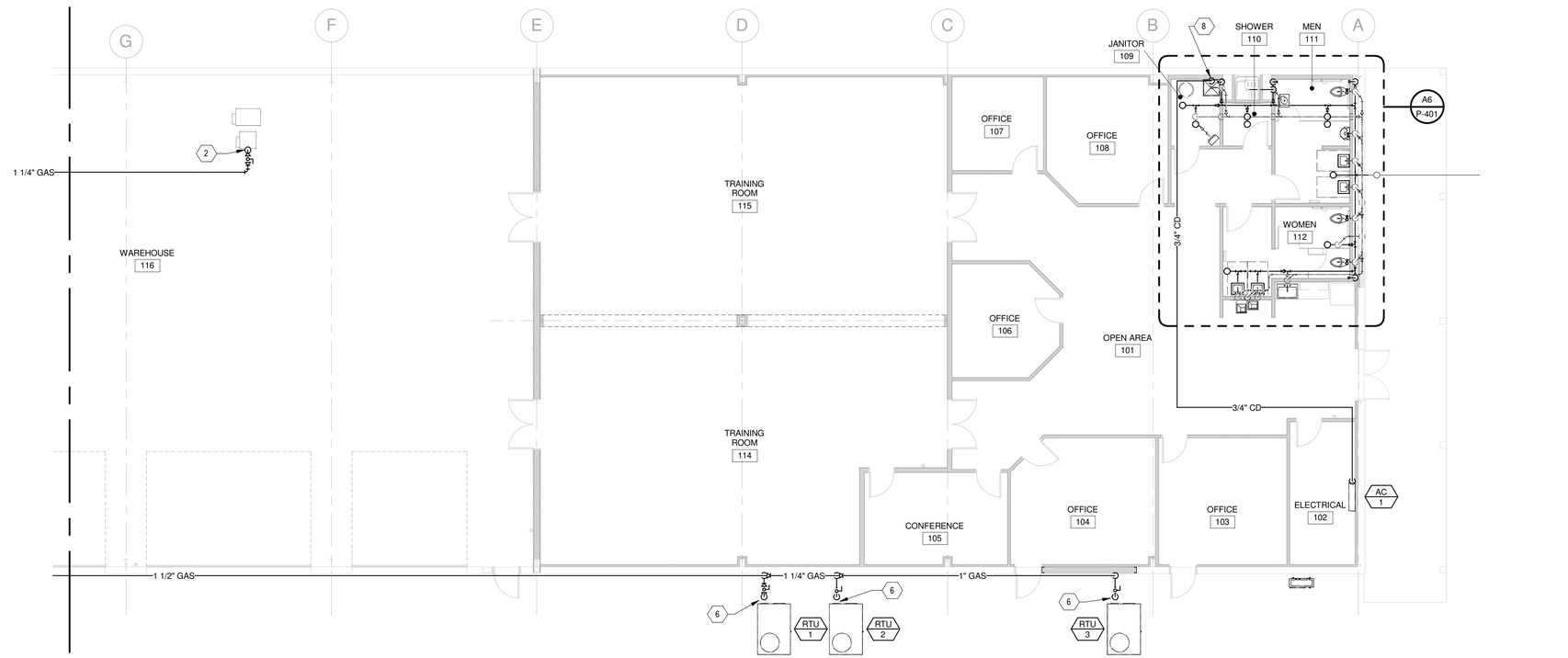

A1 PLUMBING WASTE & VENT PLAN - SOUTH

1/8" = 1'-0"

GENERAL SHEET NOTES

1. SEE RISER DIAGRAM FOR DETAILED SEWER AND VENT PIPE SIZING.
2. COORDINATE EXACT LOCATION OF ROOF PENETRATIONS WITH ROOF STRUCTURE LOCATIONS. ALL PENETRATIONS TO BE A MIN. OF 18" FROM WALLS, CURBS, PIPES, VENT STACKS, AND OTHER ROOF PENETRATIONS.
3. COORDINATE ALL PLUMBING AND PIPING WITH OTHER EQUIPMENT.
4. INSTALL ALL MATERIALS IN ACCORDANCE WITH MANUFACTURER'S RECOMMENDATIONS.
5. SEE ARCHITECTURAL DRAWINGS FOR EXACT LOCATION AND INSTALLATION HEIGHT OF ALL PLUMBING FIXTURES & EXACT BUILDING DIMENSIONS.
6. INSULATE ALL HOT WATER, COLD WATER AND P-TRAPS WITH TRAP WRAP TO ADA REQUIREMENTS.
7. SEE SHEET P-601 FOR PLUMBING FIXTURE SCHEDULE. ALL PLUMBING FIXTURE SUBSTITUTION SHALL BE BY ENGINEER APPROVAL.
8. CONTRACTOR TO COORDINATE AND VERIFY SERVICE CONNECTIONS ON ALL FIXTURES.
9. MANIFOLD ALL PLUMBING VENTS ABOVE FLOOD LEVEL OF PLUMBING FIXTURES.
10. PROVIDE CHROME-PLATE STEEL ESCUTCHEONS FOR PIPES AT WALL PENETRATIONS.
11. SEWER AND VENT RUNS ARE 2" UNLESS OTHERWISE SPECIFIED.
12. CONTRACTOR TO ROUTE ALL VENT LINES THROUGH ROOF TO BE A MINIMUM OF 10'-0" FROM ANY HVAC EQUIPMENT INTAKES INTO BUILDING. MAINTAIN 1/8" PER FOOT SLOPE.
13. CONTRACTOR RESPONSIBLE FOR LOCATING ALL UTILITY LINES.
14. ALL FLOOR DRAINS SHALL BE EQUIPPED WITH PROSET TRAP GUARD.
15. UTILITY EXPANSION CHARGES SHALL BE PAID FOR BY OWNER AND ARE NOT TO BE INCLUDED IN THIS CONTRACT.
16. ALL PLUMBING FIXTURES SHALL HAVE INDIVIDUAL CLEANOUTS.
17. ALL SEWER LINES BELOW GRADE SHALL BE SCHEDULE 80 PVC. ALL SEWER AND VENT LINES ABOVE GRADE SHALL BE SERVICE WEIGH CAST IRON.
18. THE CONTRACTOR SHALL FIELD VERIFY ALL DIMENSIONS AND CONDITIONS OF EXISTING CONSTRUCTION AND REPORT ANY INCONSISTENCIES TO THE ENGINEER BEFORE PROCEEDING WITH WORK AFFECTED BY SUCH INCONSISTENCIES. THE CONTRACTOR IS RESPONSIBLE FOR OBTAINING THE INTENT OF THE DESIGN AS SHOWN ON THE PLANS. ACTUAL CONDITIONS SHALL GOVERN OVER WRITTEN DIMENSIONS, WRITTEN DIMENSIONS SHALL GOVERN OVER ACTUAL DRAWING REPRESENTATION. ATTEMPTS TO UTILIZE SCALING OR ELECTRONIC MEANS TO DETERMINE QUANTITY TAKE-OFF MAY BE AFFECTED BY NOT-TO-SCALE ITEMS. THE ENGINEER IS NOT RESPONSIBLE FOR, AND SHALL NOT BE HELD LIABLE FOR THE ACCURACY OF RESULTS OF SUCH TAKE OFFS.

SHEET KEYNOTES

1. EXISTING PROPANE TANK. CONNECT NEW 2" BLACK STEEL PIPE. PROVIDE CONNECTION FITTINGS AS NEEDED.
2. CONNECT NEW PROPANE LINE TO EXISTING MECHANICAL UNIT. PROVIDE ISOLATION VALVES AS NEEDED.
3. PROVIDE EMERGENCY PROPANE SHUT-OFF VALVE AND GAS REGULATOR AT THIS LOCATION.
4. CONNECT PROPANE PIPE TO EXISTING PROPANE PIPE BRANCH TO EXISTING MECHANICAL UNIT.
5. ROUTE NEW PROPANE PIPE IN CEILING SPACE. PROVIDE HANGERS PER DETAIL, SHEET P-501.
6. CONNECT PROPANE LINE TO NEW MECHANICAL UNIT. PROVIDE ISOLATION VALVE. REFER TO MECHANICAL.
7. DIRECT BURY PROPANE PIPE FROM PROPANE TANK TO BUILDING AS SHOWN. REFER TO PIPE TRENCHING DETAIL, SHEET P-501.
8. 3/4" CONDENSATE DRAIN FROM CEILING SPACE TO BE PIPED DOWN WALL TO MOP SINK AT APPROXIMATE LOCATION SHOWN WITH 1" AIR GAP. PIPE SHALL HAVE A MINIMUM OF 1/8" SLOPE AND SHALL SLOPE TO DRAIN. COORDINATE EXACT ROUTING OF PIPE WITH EXISTING CONDITIONS TO ACHIEVE PROPER SLOPE TO DRAIN.

WILSON & COMPANY
4900 LANG AVENUE NE
ALBUQUERQUE, NM 87109
PHONE: (505) 348-4000

CONSULTANTS

SEAL

MARK W. WENTZEL
NEW MEXICO
17012
LICENSED PROFESSIONAL ENGINEER
7-15-2015

PROJECT NAME:
OTERO COUNTY
EMERGENCY OPERATIONS CENTER
ALAMOGORDO, NM

MARK	DATE	DESCRIPTION
-	07-15-15	PERMIT DOCUMENTS

PROJECT NO: 15-600-204-01

DRAWN BY PJM

CHECKED BY MWW

SHEET TITLE
PLUMBING WASTE & VENT PLAN

P-101

SHEET ___ OF ___

7/20/2015 2:46:14 PM

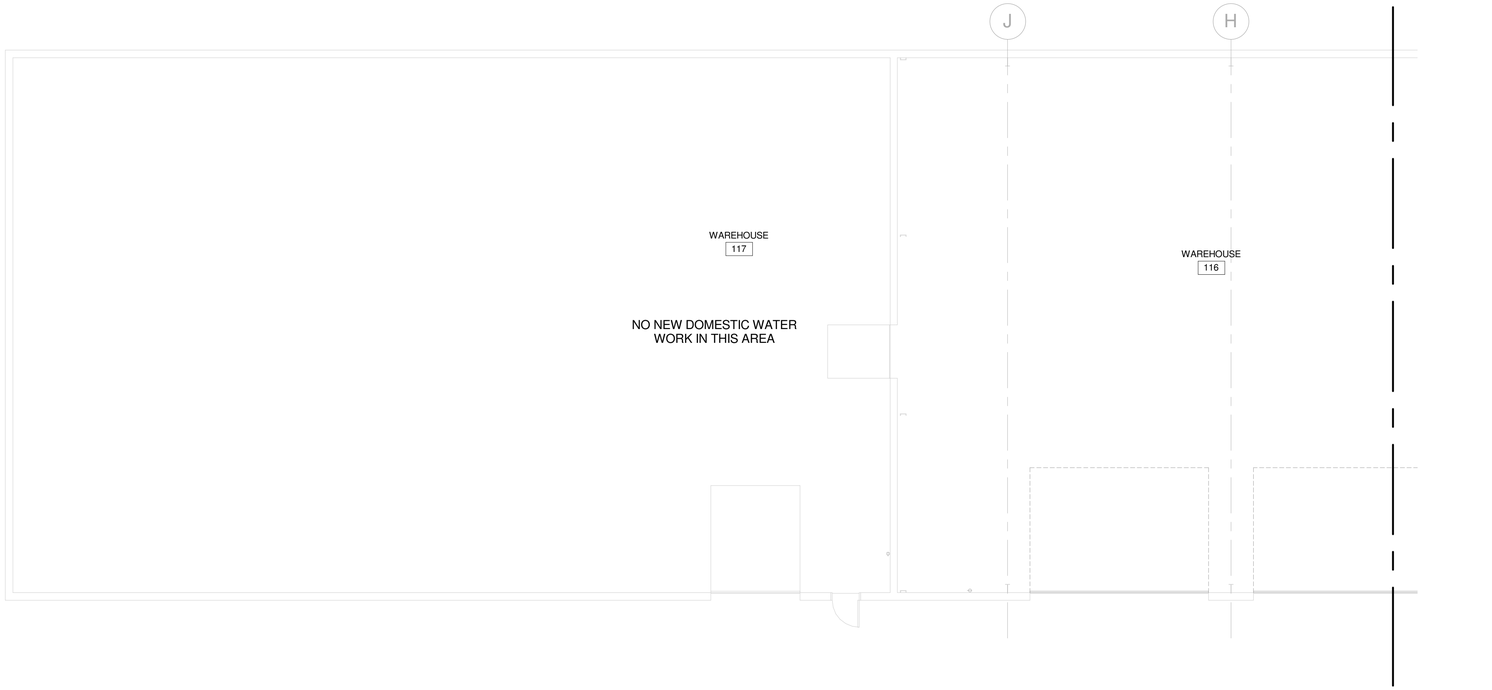

E1 PLUMBING DOMESTIC WATER PLAN - NORTH

1/8" = 1'-0"

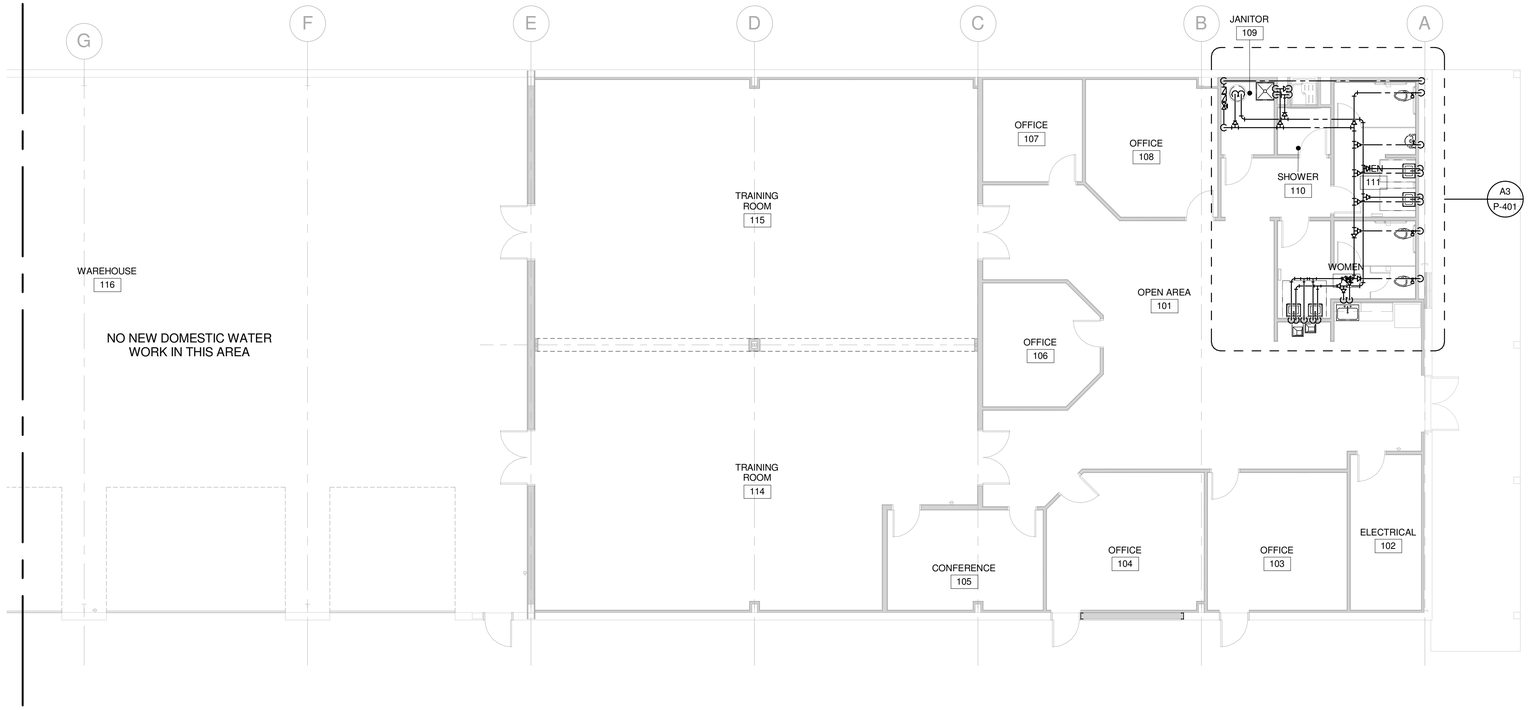

A1 PLUMBING DOMESTIC WATER PLAN - SOUTH

1/8" = 1'-0"

GENERAL SHEET NOTES

1. SEE RISER DIAGRAM FOR DETAILED DOMESTIC WATER PIPE SIZING.
2. COORDINATE ALL PLUMBING AND PIPING WITH OTHER EQUIPMENT.
3. INSTALL ALL MATERIALS IN ACCORDANCE WITH MANUFACTURER'S RECOMMENDATIONS.
4. SEE ARCHITECTURAL DRAWINGS FOR EXACT LOCATION AND INSTALLATION HEIGHT OF ALL PLUMBING FIXTURES & EXACT BUILDING DIMENSIONS.
5. INSULATE ALL HOT WATER, COLD WATER AND P-TRAPS WITH TRAP WRAP TO ADA REQUIREMENTS.
6. SEE SHEET P-601 FOR PLUMBING FIXTURE SCHEDULE. ALL PLUMBING FIXTURE SUBSTITUTION SHALL BE BY ENGINEER APPROVAL.
7. CONTRACTOR TO COORDINATE AND VERIFY SERVICE CONNECTIONS ON ALL FIXTURES.
8. PROVIDE CHROME-PLATE STEEL ESCUTCHEONS FOR PIPES AT WALL PENETRATIONS.
9. HOT AND COLD WATER RUNS ARE 1/2" UNLESS OTHERWISE SPECIFIED.
10. ALL WATER RUNS ARE OVERHEAD AND SHALL BE CONCEALED WHEREVER POSSIBLE. ANY EXPOSED PIPING SHALL BE COORDINATED WITH A ARCHITECT PRIOR TO INSTALLATION. SLOPE TO DRAIN.
11. HOT AND COLD WATER PIPING IS TO BE INSTALLED ACCORDING TO UP0C. INSULATE HOT WATER AND COLD WATER SUPPLY PIPING WITH 1" FIBERGLASS INSULATION.
12. PIPE MATERIAL: TYPE L COPPER PIPE FOR DOMESTIC WATER UNLESS OTHERWISE NOTED.
13. PROVIDE MECHANICAL WATER HAMMER ARRESTORS AT ALL FLUSH VALVES.
14. CONTRACTOR RESPONSIBLE FOR LOCATING ALL UTILITY LINES.
15. UTILITY EXPANSION CHARGES SHALL BE PAID FOR BY OWNER AND ARE NOT TO BE INCLUDED IN THIS CONTRACT.
16. THE CONTRACTOR SHALL FIELD VERIFY ALL DIMENSIONS AND CONDITIONS OF EXISTING CONSTRUCTION AND REPORT ANY INCONSISTENCIES TO THE ENGINEER BEFORE PROCEEDING WITH WORK AFFECTED BY SUCH INCONSISTENCIES. THE CONTRACTOR IS RESPONSIBLE FOR OBTAINING THE INTENT OF THE DESIGN AS SHOWN ON THE PLANS. ACTUAL CONDITIONS SHALL GOVERN OVER WRITTEN DIMENSIONS. WRITTEN DIMENSIONS SHALL GOVERN OVER ACTUAL DRAWING REPRESENTATION. ATTEMPTS TO UTILIZE SCALING OR ELECTRONIC MEANS TO DETERMINE QUANTITY TAKE-OFF MAY BE AFFECTED BY NOT-TO-SCALE ITEMS. THE ENGINEER IS NOT RESPONSIBLE FOR, AND SHALL NOT BE HELD LIABLE FOR THE ACCURACY OF RESULTS OF SUCH TAKE OFFS.

WILSON & COMPANY
4900 LANG AVENUE NE
ALBUQUERQUE, NM 87109
PHONE: (505) 348-4000

CONSULTANTS

SEAL

MARK W. WENTZEL
NEW MEXICO
17012
REGISTERED PROFESSIONAL ENGINEER
7-15-2015

PROJECT NAME:
OTERO COUNTY
EMERGENCY OPERATIONS CENTER
ALAMOGORDO, NM

MARK	DATE	DESCRIPTION
-	07-15-15	PERMIT DOCUMENTS

PROJECT NO: 15-600-204-01

DRAWN BY PJM

CHECKED BY MWW

SHEET TITLE
PLUMBING DOMESTIC WATER PLAN

P-102

SHEET ___ OF ___

7/20/2015 2:46:18 PM

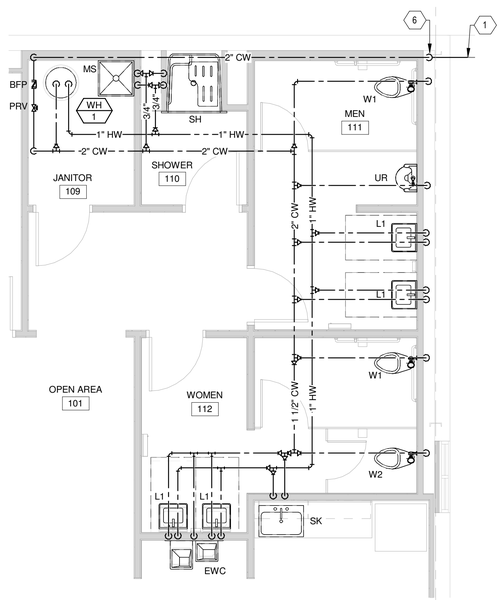

A3 ENLARGED DOMESTIC WATER PLAN

1/4" = 1'-0"

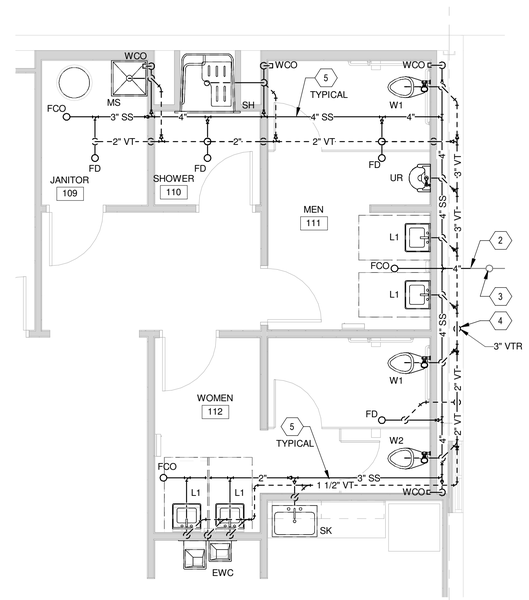

A6 ENLARGED WASTE & VENT PLAN

1/4" = 1'-0"

GENERAL SHEET NOTES

1. COORDINATE EXACT LOCATION OF ROOF PENETRATIONS WITH ROOF STRUCTURE LOCATIONS. ALL PENETRATIONS TO BE A MIN. OF 18" FROM WALLS, CURBS, PIPES, VENT STACKS, AND OTHER ROOF PENETRATIONS.
2. COORDINATE ALL PLUMBING AND PIPING WITH OTHER EQUIPMENT.
3. INSTALL ALL MATERIALS IN ACCORDANCE WITH MANUFACTURER'S RECOMMENDATIONS.
4. SEE ARCHITECTURAL DRAWINGS FOR EXACT LOCATION AND INSTALLATION HEIGHT OF ALL PLUMBING FIXTURES & EXACT BUILDING DIMENSIONS.
5. INSULATE ALL HOT WATER, COLD WATER AND P-TRAPS WITH TRAP WRAP TO ADA REQUIREMENTS.
6. SEE SHEET P-601 FOR PLUMBING FIXTURE SCHEDULE. ALL PLUMBING FIXTURE SUBSTITUTION SHALL BE BY ENGINEER APPROVAL.
7. MANIFOLD ALL PLUMBING VENTS ABOVE FLOOD LEVEL OF PLUMBING FIXTURES.
8. PROVIDE CHROME-PLATE STEEL ESCUTCHEONS FOR PIPES AT WALL PENETRATIONS.
9. HOT AND COLD WATER RUNS ARE 1/2" UNLESS OTHERWISE SPECIFIED.
10. ALL WATER RUNS ARE OVERHEAD AND SHALL BE CONCEALED WHEREVER POSSIBLE. ANY EXPOSED PIPING SHALL BE COORDINATED WITH A ARCHITECT PRIOR TO INSTALLATION. SLOPE TO DRAIN.
11. HOT AND COLD WATER PIPING IS TO BE INSTALLED ACCORDING TO UP0C. INSULATE HOT WATER AND COLD WATER SUPPLY PIPING WITH 1" FIBERGLASS INSULATION.
12. PIPE MATERIAL: TYPE L COPPER PIPE FOR DOMESTIC WATER
13. PROVIDE MECHANICAL WATER HAMMER ARRESTORS AT ALL WATER CLOSETS.
14. CONTRACTOR RESPONSIBLE FOR LOCATING ALL UTILITY LINES.
15. ALL AIR VENTS, GAUGES, THERMOMETERS, AND TRAP PRIMERS SHALL BE MOUNTED IN AN ACCESSIBLE LOCATION, OR BEHIND AN ACCESS PANEL, PROVIDED BY PLUMBING CONTRACTOR.
16. THE CONTRACTOR SHALL FIELD VERIFY ALL DIMENSIONS AND CONDITIONS OF EXISTING CONSTRUCTION AND REPORT ANY INCONSISTENCIES TO THE ENGINEER BEFORE PROCEEDING WITH WORK AFFECTED BY SUCH INCONSISTENCIES. THE CONTRACTOR IS RESPONSIBLE FOR OBTAINING THE INTENT OF THE DESIGN AS SHOWN ON THE PLANS. ACTUAL CONDITIONS SHALL GOVERN OVER WRITTEN DIMENSIONS. WRITTEN DIMENSIONS SHALL GOVERN OVER ACTUAL DRAWING REPRESENTATION. ATTEMPTS TO UTILIZE SCALING OR ELECTRONIC MEANS TO DETERMINE QUANTITY TAKE-OFF MAY BE AFFECTED BY NOT-TO-SCALE ITEMS. THE ENGINEER IS NOT RESPONSIBLE FOR, AND SHALL NOT BE HELD LIABLE FOR THE ACCURACY OF RESULTS OF SUCH TAKE OFFS.

SHEET KEYNOTES

1. CONNECT NEW 2" DOMESTIC WATERLINE TO EXISTING WATERLINE. CONTRACTOR TO FIELD VERIFY LOCATION AND SIZE OF EXISTING PIPE. REPLACE ENTIRE PIPE RUN BACK TO WATER METER IF EXISTING SIZE IS UNDER 2".
2. CONNECT NEW 4" SANITARY SEWER PIPE TO EXISTING SANITARY LINE. CONTRACTOR TO FIELD VERIFY LOCATION AND SIZE OF EXISTING PIPE.
3. UTILIZE EXISTING CLEANOUT. CONTRACTOR TO SNAKE EXISTING SANITARY SEWER SERVICE LINE BEFORE AND AFTER CONSTRUCTION.
4. CONTRACTOR TO UTILIZE EXISTING VENT PENETRATION FOR NEW 3" VTR.
5. CONTRACTOR TO SAWCUT EXISTING SLAB AS NEEDED FOR INSTALLATION OF NEW SANITARY SEWER PIPE.
6. ROUTE NEW 2" CW LINE UP EXTERIOR WALL AND PENETRATE WALL AS HIGH AS POSSIBLE INTO CEILING SPACE. ROUTE AS SHOWN TO MECHANICAL ROOM & BACK FLOW PREVENTER.

WILSON & COMPANY
4900 LANG AVENUE NE
ALBUQUERQUE, NM 87109
PHONE: (505) 348-4000

CONSULTANTS

SEAL

MARK W. WENTZEL
NEW MEXICO
17012
LICENSED PROFESSIONAL ENGINEER
7-15-2015

PROJECT NAME:
OTERO COUNTY
EMERGENCY OPERATIONS CENTER
ALAMOGORDO, NM

MARK	DATE	DESCRIPTION
-	07-15-15	PERMIT DOCUMENTS

PROJECT NO: 15-600-204-01

DRAWN BY PJM

CHECKED BY MWW

SHEET TITLE
ENLARGED PLUMBING PLANS

P-401

SHEET ___ OF ___

7/20/2015 2:46:23 PM

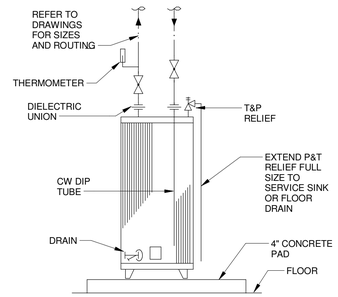

F6 ELECTRIC WATER HEATER DETAIL
NTS

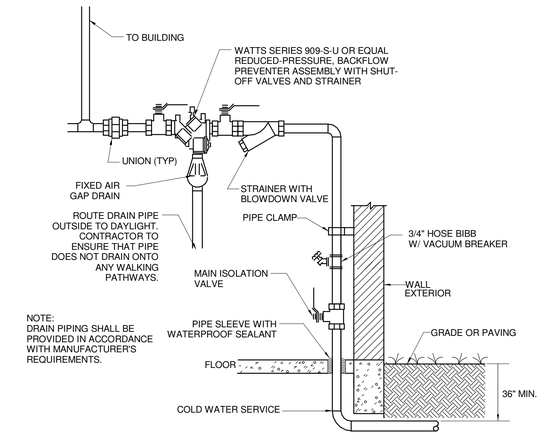

F8 DOMESTIC WATER SERVICE ENTRANCE
NTS

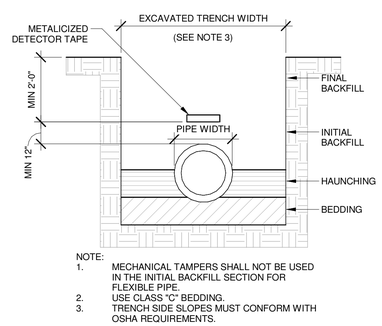

C3 PIPE TRENCHING DETAIL
NTS

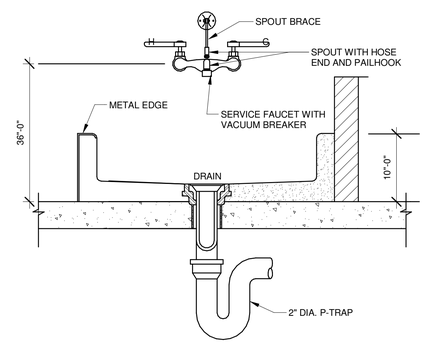

C5 MOP SINK DETAIL
NTS

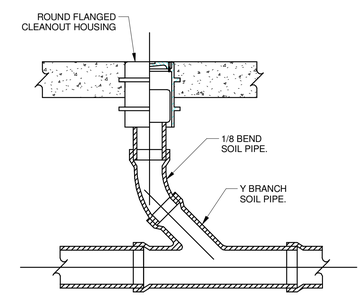

C7 SANITARY CLEANOUT FLOOR SLAB DETAIL
NTS

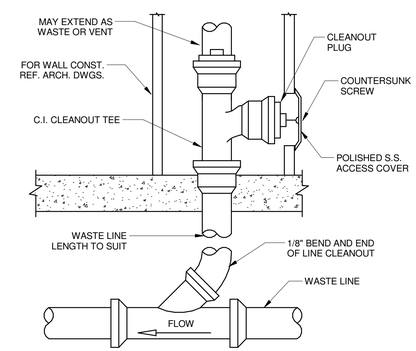

C9 WALL CLEANOUT-FINISHED ROOMS
NTS

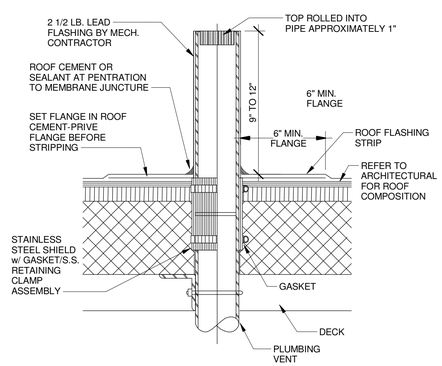

A3 VENT THRU ROOF DETAIL
NTS

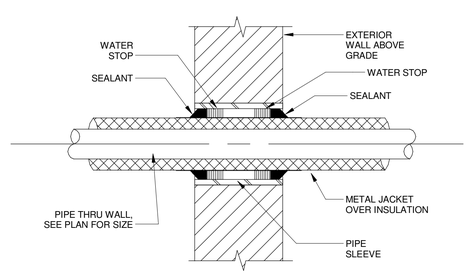

A5 PIPING THRU WALL PENETRATION
NTS

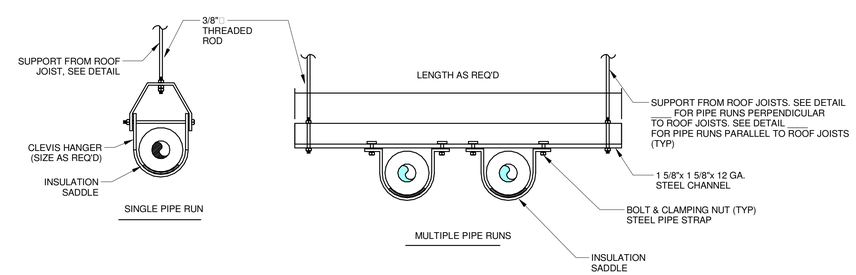

A7 PIPE SUPPORT DETAILS
NTS

WILSON & COMPANY
4900 LANG AVENUE NE
ALBUQUERQUE, NM 87109
PHONE: (505) 348-4000

CONSULTANTS

SEAL
MARK W. WENTZEL
NEW MEXICO
17012
REGISTERED PROFESSIONAL ENGINEER
7-15-2015

PROJECT NAME:
OTERO COUNTY
EMERGENCY OPERATIONS CENTER
ALAMOGORDO, NM

MARK	DATE	DESCRIPTION
-	07-15-15	PERMIT DOCUMENTS

PROJECT NO: 15-600-204-01
DRAWN BY PJM
CHECKED BY MWW
SHEET TITLE
PLUMBING DETAILS

P-501
SHEET ___ OF ___

7/20/2015 2:46:24 PM

PLUMBING FIXTURE SCHEDULE

MARK	FIXTURE DISCRIPTION	MANUFACTURER(S)	MODEL NO.	FIXTURE MOUNTING HEIGHT	ROUGH IN SCHEDULE CW	HW	W	V	COMMENTS
EWC	BI-LEVEL ELECTRIC WATER COOLER	HALSEY TAYLOR	HRFESR-Q	STANDARD	1/2"	-	2"	1-1/2"	SHALL DELIVER 7.5 GPH OF 50°F WATER AT 90°F AMBIENT AND 80°F INLET WATER, PUSHBUTTON VALVE ON FRONT, CONTOUR-FORMED BASIN, ROUNDED CORNERS, CHROME PLATED BUBBLER, EFFICIENCY POSITIVE START COMPRESSOR USING R134A COOLING UNIT, COMPLY WITH ANSI 117:1 AND ADA. MANUFACTURER SHALL CERTIFY THE UNIT TO MEET THE REQUIREMENTS OF NSF/ANSI 61, AND THE SAFE DRINKING WATER ACT. UNIT COMPLIES WITH ARI STANDARD 1010
L1	LAVATORY	ZURN "ONE SYSTEMS"	Z5311.261.1.00.01.5	34" TO RIM	1/2"	1/2"	2"	1-1/2"	20" X 18" WALL HUNG CONCEALED CARRIER ARM LAVATORY-SINGLE HOLE; Z6912 HARDWIRE SENSOR FAUCET WITH THERMOSTATIC MIXING VALVE FOR MULTIPLE FAUCETS; GRID DRAIN; LOOSE KEY STOP LAVATORY SUPPLY KIT (CONNECTIONS 3/8" IPS X 3/8" OD) WITH BRAIDED STAINLESS STEEL SUPPLIES; ADA COMBINATION TRAP AND SUPPLY WRAP PROTECTOR KIT 5 YEAR WARRANTY
MS	MOP SINK	ZURN "ONE SYSTEMS"	Z1996.05.214.1.00.04	STANDARD	1/2"	1/2"	2"	1-1/2"	HIGH DENSITY COMPOSITE MOP SERVICE BASIN; 3" STAINLESS STEEL DRAIN ASSEMBLY WITH NEOPRENE PUSH-ON GASKET. REMOVE GASKET FOR 3" CAULK CONNECTION; SERVICE SINK FCT W/6" INTEGRAL VB SPOUT W/HOSE THREAD OUTLET & PAIL HOOK, ADJUSTABLE SWIVEL INLETS, 2-1/2" LEVER HANDLES; STAINLESS STEEL BUMPER GUARDS; HOSE AND HOSE BRACKET WITH MOP HANGER. 5 YEAR WARRANTY
SH	SHOWER	STERN WILLIAMS	HSC-143	STANDARD	1/2"	1/2"	2"	1-1/2"	ALL INCLUSIVE SHOWER INSERT, W/ HAND HELD SHOWER HEAD, ROD AND CURTAIN, GRAB BAR, AND RETRACTABLE SEAT. INCLUDES BASE. PRESSURE BALANCED MIXING VALVE, 40" X 40" BASE.
SK	SINGLE COMP SINK	ELKAY	ELUHAD 2816	COUNTER TOP	1/2"	1/2"	2"	1-1/2"	5-1/2" DEEP, ADA COMPLIANT, STAINLESS STEEL, THREE HOLE, SELF RIMMING, FULLY COATED UNDERSIDE, 4" O.C. HOLES, MODEL Z871G1 FAUCET BY ZURN, 2-1/2" LEVER HANDLE, 8" SPOUT, 1/2" NPSM COUPLING NUTS, ADA COMPLIANT.
UR	URINAL	ZURN "ONE SYSTEMS"	Z5750.118.11	24" TOP OF RIM	3/4"	-	2"	1-1/2"	0.5 OR 1.0 GPF TOPSPUD WASHOUT URINAL; HARDWIRED SENSOR FLUSH VALVE WITH INTEGRAL SENSOR, 3/4" TOP SPUD; HARDWIRED POWER CONVERTER FOR 6VDC FLUSH VALVES AND FAUCETS. 5 YEAR WARRANTY
W1	WATER CLOSET (ADA)	ZURN "ONE SYSTEMS"	Z5655.043.01.78.00	17" TOP OF RIM	1"	-	4"	2"	(ADA) ECOVANTAGE 1.6 GPF FLUSH VALVE SYSTEM WITH TOP SPUD FLOOR-MOUNTED VITREOUS CHINA FIXTURE; HARD WIRED FLUSH VALVE WITH INTEGRAL SENSOR; ELONGATED, STANDARD WHITE, OPEN FRONT TOILET SEAT, LESS COVER, WITH STAINLESS STEEL CHECK HINGE; HARDWIRED POWER CONVERTER FOR 6VDC FLUSH VALVES. 5 YEAR WARRANTY
W2	WATER CLOSET	ZURN "ONE SYSTEMS"	Z5655.043.01.78.00	15" TOP OF RIM	1"	-	4"	2"	ECOVANTAGE 1.6 GPF FLUSH VALVE SYSTEM WITH TOP SPUD FLOOR-MOUNTED VITREOUS CHINA FIXTURE; HARD WIRED FLUSH VALVE WITH INTEGRAL SENSOR; ELONGATED, STANDARD WHITE, OPEN FRONT TOILET SEAT, LESS COVER, WITH STAINLESS STEEL CHECK HINGE; HARDWIRED POWER CONVERTER FOR 6VDC FLUSH VALVES. 5 YEAR WARRANTY

ELECTRIC WATER COOLER

MARK	FIXTURE DISCRIPTION	MANUFACTURER	MODEL NO.	BASE RATE CAP.	RATED WATTS	FULL LOADS AMP	CONNECTIONS CW	HW	W	V	COMMENTS
EWC	BI-LEVEL ELECTRIC WATER COOLER	HALSEY TAYLOR	HRFESR-Q	7.5	370	4	1/2"	-	2"	1-1/2"	SHALL DELIVER 7.5 GPH OF 50°F WATER AT 90°F AMBIENT AND 80°F INLET WATER, PUSHBUTTON VALVE ON FRONT, CONTOUR-FORMED BASIN, ROUNDED CORNERS, CHROME PLATED BUBBLER, EFFICIENCY POSITIVE START COMPRESSOR USING R134A COOLING UNIT, COMPLY WITH ANSI 117:1 AND ADA. MANUFACTURER SHALL CERTIFY THE UNIT TO MEET THE REQUIREMENTS OF NSF/ANSI 61, AND THE SAFE DRINKING WATER ACT. UNIT COMPLIES WITH ARI STANDARD 1010

MISCELLANEOUS PLUMBING FIXTURE SCHEDULE

MARK	DESCRIPTION	MANUFACTURER	MODEL	CONNECTIONS CW	HW	W	V	COMMENTS
BFP	BACKFLOW PREVENTOR DOUBLE CHECK TYPE, 2" SIZE	WATTS	909	2"	-	-	-	COMPLETE WITH STRAINER AND ISOLATION VALVES. DEVICE SHALL MEET REQUIREMENTS OF ASSE STD 1013, REDUCED PRESSURE TYPE. FURNSIH FOR HORIZONTAL INSTALLATION, WITH VENT ELBOW AND AIR GAP, 2 1/2" SIZE.
DCO	CLEANOUT (OUTSIDE OR UNFINISHED AREA)	ZURN	Z-1400-HD NH CAST IRON TAP	-	-	SEE DRWGS	-	P.B. TOP IN OUTSIDE AREAS, CAST IRON TOP, VANDELPROOF SCREWS, GALVANIZED
FCO	FLOOR CLEANOUT (INSIDE BUILDING FOR APPLICALBE FINISH), CONCRETE CERAMIC OR QUARRY TILE	ZURN	ZN-1400 NH VINYL TILE/CONCRETE	-	-	SEE DRWGS	-	ZURN NO. ZN-1400-X NH, RECESSED FOR TILE. CARPET ZURN NO. ZN-1400-CF NH FOR CARPET, WITH MARKER.
FD	FLOOR DRAIN	ZURN	ZN-415 W/ TYPE B	-	-	3"	2"	PROVIDE AND INSTALL PROSET TRAP GUARD WITH FLOOR DRAIN
PRV	PRESSURE REDUCING VALVE	WILKINS	500Y SBR	2 1/2"	-	-	-	25 TO 75 PSI SPRING, 65 GPM AT 15 PSI PRESSURE DROP, SET TO DELIVER 55 PSI TO BUILDING
WCO	WALL CLEANOUT BRONZE PLUG	ZURN	Z-1468 ZS	-	-	SEE DRWGS	-	INSTALL WHERE C.O. BELOW FIXTURE CONNECTION IS REQUIRED BY CODE AND WHERE SOWN ON PLANS. STAINLESS STEEL FACE WALL COVER W/ VANDALPROOF SCREWS

DOMESTIC WATER HEATER SCHEDULE (ELECTRIC)

MARK	NO.	MANUFACTURER	MODEL NO.	STORAGE (GAL)	RECOVERY RATE AT 80 F (GPH)	ELECTRICAL VOLTS	KW	AMPS	COMMENTS
WH	1	A. O. Smith	DEN-40	40	15	208	3	14.4	FURNISH WITH TAP RELIEF VALVE, ANODE ROD, UL LISTED, ASHRA/IESNA 90.1 ENERGY COMPLIANT, GLASS COATED TANK INTERIOR, ROUTE P & T DISCHARGE LINE TO MOP SINK, ELBOW DOWN AND MAINTAINZ" AIR GAP ABOVE FLOOD RIM.

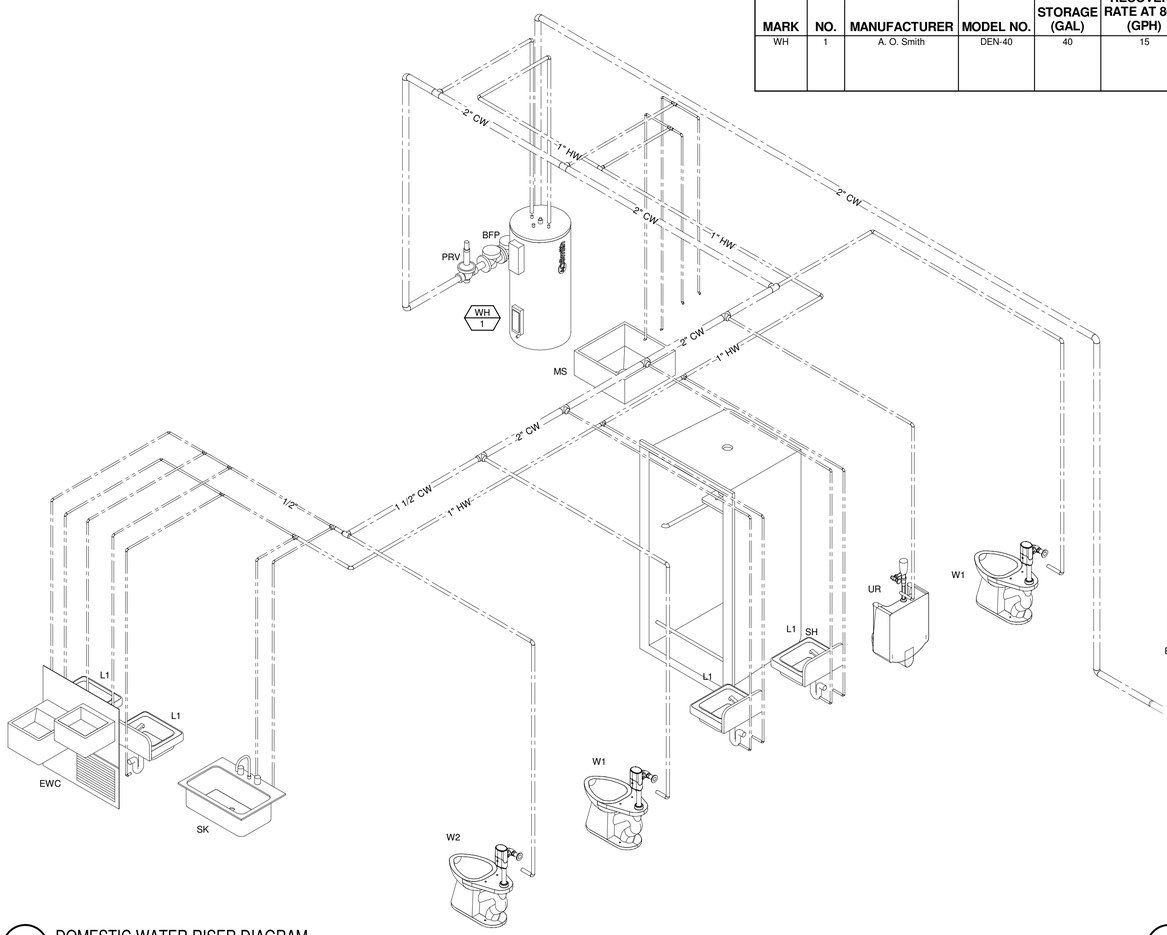

A1 DOMESTIC WATER RISER DIAGRAM

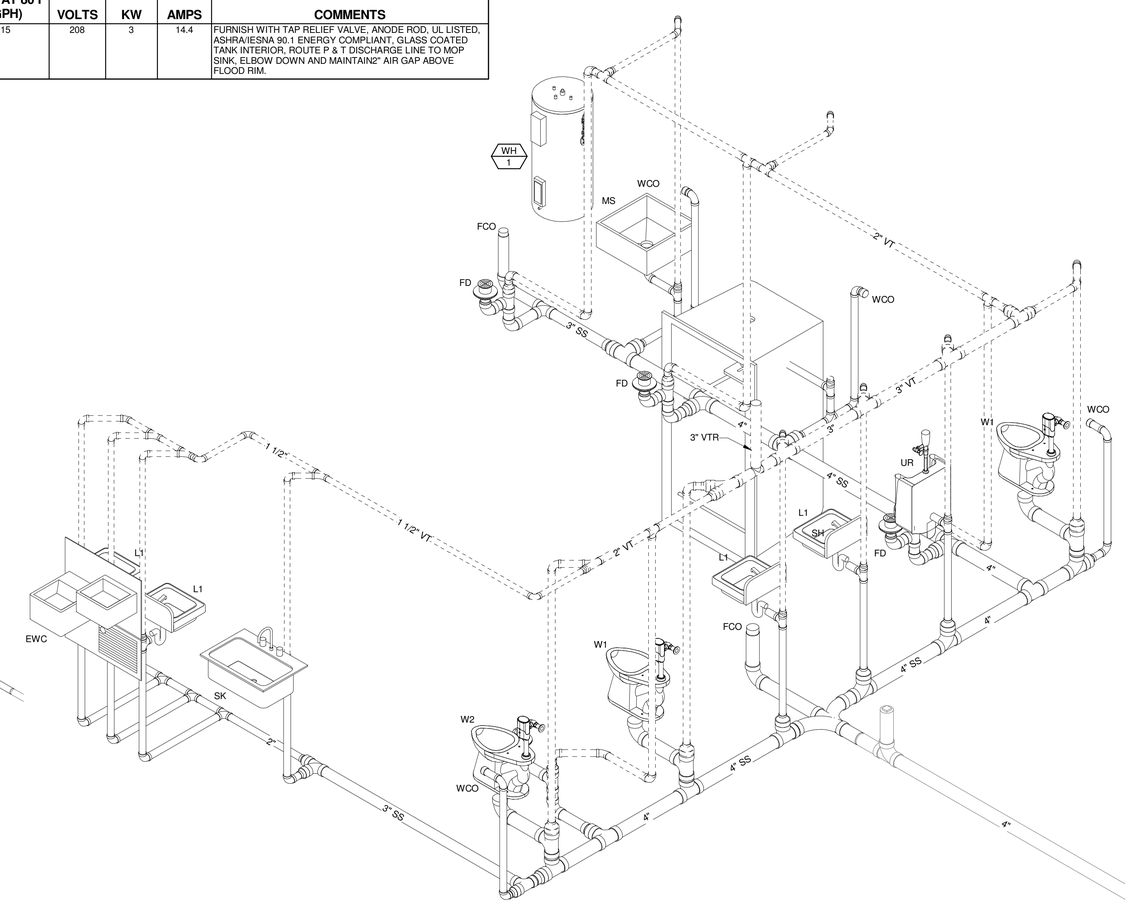

A5 WASTE AND VENT RISER DIAGRAM

WILSON & COMPANY
4900 LANG AVENUE NE
ALBUQUERQUE, NM 87109
PHONE: (505) 348-4000

CONSULTANTS

SEAL

MARK W. WENTZEL
NEW MEXICO
17012
LICENSED PROFESSIONAL ENGINEER
7-15-2015

PROJECT NAME:
OTERO COUNTY
EMERGENCY OPERATIONS CENTER
ALAMOGORDO, NM

MARK	DATE	DESCRIPTION
-	07-15-15	PERMIT DOCUMENTS

PROJECT NO: 15-600-204-01

DRAWN BY PJM

CHECKED BY MWW

SHEET TITLE
PLUMBING SCHEDULES

P-601

SHEET ___ OF ___

7/20/2015 2:46:27 PM

MECHANICAL ABBREVIATIONS

ABBREVIATION	DEFINITION
AFF	ABOVE FINISHED FLOOR
AFG	ABOVE FINISHED GRADE
CC	COOLING COIL
CFH	CUBIC FEET PER HOUR
CL	CENTERLINE
CLG	CEILING
CRAH	COMPUTER ROOM AIR HANDLER
CRCU	COMPUTER ROOM CONDENSING UNIT
CU	CONDENSING UNIT
CW	COLD WATER
DN	DOWN
DS	DOWNSPOUT
EA	EXHAUST AIR
EC	ELECTRICAL CONTRACTOR
EF	EXHAUST FAN
ELEV	ELEVATION
F	FURNACE
FCO	FLOOR CLEAN-OUT
FD	FLOOR DRAIN
FD	FIRE DAMPER
FF	FINISHED FLOOR
FPHB	FREEZE-PROOF HOSE BIBB
FPWH	FREEZE-PROOF WALL HYDRANT
FS	FLOOR SINK
FS	COMBINATION FIRE/SMOKE DAMPER
GAS	NATURAL GAS
GC	GENERAL CONTRACTOR
GCO	GRADE CLEANOUT
JB	JOIST BEARING
KF	KITCHEN FAN
L	LOUVER
LAV	LAVATORY
MC	MECHANICAL CONTRACTOR
OA	OUTSIDE AIR
PC	PLUMBING CONTRACTOR
RA	RETURN AIR
RTU	ROOF TOP UNIT
SA	SUPPLY AIR
SD	SMOKE DAMPER
T	THERMOSTAT
TS	TEMPERATURE SENSOR
WH	DOMESTIC WATER HEATER

MECHANICAL LEGEND

MARK	DEFINITION
16 x 14	AIRFLOW DIMENSIONS (WIDTH x HEIGHT)
	HIGH-EFFICIENCY RECTANGULAR TO ROUND DUCT TAKE-OFF
	RECTANGULAR TAKE-OFF FROM RECTANGULAR DUCT (BEVELED TYPE)
	SUPPLY AIR DIFFUSER WITH FLEXIBLE DUCT RUN-OUT (KEEP FLEX RUN UNDER FIVE FEET)
B 8" Ø 205 CFM	AIR DEVICE TAG - MARK - NECK SIZE - AIRFLOW
	ROOF-MOUNTED EXHAUST FAN
	AIR DIFFUSER
	RETURN AIR GRILLE
	EXHAUST AIR GRILLE
	SLOT DIFFUSER WITH FLEX DUCT RUN-OUT
	AIRFLOW ARROW
	THREE-WAY DIFFUSER - HATCH PATTERN DEPICTS BLOCKED DIRECTION(S)
XXX 1	EQUIPMENT TAG (EQUIPMENT ABBREVIATION - NUMBER)
FD	AN ACCESSIBLE FIRE/SMOKE DAMPER EQUAL TO THE RATING OF THE ASSEMBLY IT PROTECTS
	OPPOSED BLADE VOLUME DAMPER

GENERAL MECHANICAL REQUIREMENTS:

ENGINEER(S): PERSON(S) OR FIRM PROFESSIONALLY QUALIFIED AND DULY LICENSED TO PROVIDE ENGINEERING SERVICES.

CONTRACTOR: PERSON OR ENTITY, INCLUDING SUBCONTRACTORS, RESPONSIBLE FOR PERFORMING THE WORK OF THE CONTRACT DOCUMENTS.

CONTRACT DOCUMENTS: ALL DRAWINGS, SPECIFICATIONS, CONTRACTS, AND ANY DOCUMENT WHICH NECESSITATES THE WORK TO BE PERFORMED.

DRAWINGS, PLANS: THE PORTION OF THE CONTRACT DOCUMENTS THAT GIVES A GRAPHIC AND WRITTEN REPRESENTATION OF THE SCOPE, LOCATION AND ARRANGEMENT OF CONSTRUCTION, MATERIALS, AND EQUIPMENT.

SUBCONTRACTOR: PERSON OR ENTITY WHO HAS A DIRECT CONTRACT WITH THE BUILDER TO PERFORM ANY OF THE WORK OF THE CONTRACT DOCUMENTS.

THE WORK: INCLUDES LABOR, MATERIALS, EQUIPMENT AND SERVICES OF THE BUILDER NECESSARY TO PRODUCE EVERYTHING SHOWN, MENTIONED, OR REASONABLY INFERABLE AS BEING NECESSARY TO PRODUCE THE INTENDED RESULTS. THE ONLY THINGS NOT INCLUDED IN THE WORK ARE SPECIFICALLY MARKED "NOT-IN-CONTRACT", "BY OTHERS", "BY OWNER", "FUTURE", OR "EXISTING".

1. UNLESS OTHERWISE NOTED, THE WORK DESCRIBED ON THE PLANS AND SPECIFICATIONS SHALL INCLUDE THE FURNISHING AND INSTALLATION OF ALL LABOR AND MATERIALS NECESSARY FOR COMPLETE AND OPERATIONAL HVAC AND PLUMBING SYSTEMS. CONTRACTOR SHALL FURNISH THESE EVEN IF ITEMS REQUIRED TO ACHIEVE THIS (I.E. OFFSETS, ISOLATION AND BALANCING DEVICES, MAINTENANCE CLEARANCES, ETC.) ARE NOT SPECIFICALLY SHOWN.

2. DATA GIVEN ON THE DRAWINGS IS AS EXACT AS COULD BE SECURED. ABSOLUTE ACCURACY IS NOT GUARANTEED AND THE CONTRACTOR SHALL OBTAIN AND VERIFY EXACT LOCATIONS, MEASUREMENTS, LEVELS, SPACE REQUIREMENTS, POTENTIAL CONFLICTS WITH OTHER TRADES, ETC. AT THE SITE AND SHALL SATISFACTORILY ADAPT HIS WORK TO ACTUAL CONDITIONS AT THE BUILDINGS. THE DRAWINGS ARE DIAGRAMMATICAL IN NATURE AND SHALL NOT BE SCALED. HOWEVER, THIS DOES NOT RELIEVE ANY SUB-CONTRACTOR FROM COORDINATING HIS WORK WITH ALL OTHER TRADES AND FROM ADJUSTING HIS WORK AS REQUIRED BY THE ACTUAL CONDITIONS OF THE PROJECT. THE CONTRACTOR SHALL VISIT THE SITE BEFORE SUBMITTING A BID TO BECOME THOROUGHLY FAMILIAR WITH THE ACTUAL CONDITIONS OF THE PROJECT.

3. COORDINATE AND ADJUST ALL WORK BETWEEN TRADES AND EXISTING CONDITIONS IN ORDER TO ACCOMPLISH A NEAT, INTEGRATED AND EFFICIENT INSTALLATION. EXAMINE THE CONTRACT DOCUMENTS OF ALL TRADES (I.E. THE ARCHITECTURAL REFLECTED CEILING PLAN, ELECTRICAL LIGHTING PLAN, ETC.). COORDINATE NECESSARY EQUIPMENT, DUCTWORK AND PIPING LOCATIONS SO THAT THE FINAL INSTALLATION IS COMPATIBLE WITH THE MATERIALS AND EQUIPMENT OF THE OTHER TRADES. PREPARE SHOP DRAWINGS FOR INSTALLATION OF ALL NEW WORK BEFORE INSTALLATION TO VERIFY COORDINATION OF WORK BETWEEN TRADES.

4. ALL CAPACITIES ARE SCHEDULED AT JOBSITE ALTITUDE OF 5,281 FT.

5. VERIFY THE ELECTRICAL SERVICE PROVIDED BY THE ELECTRICAL CONTRACTOR BEFORE ORDERING ANY MECHANICAL EQUIPMENT REQUIRING ELECTRICAL CONNECTIONS.

6. SUSPEND EACH TRADE'S WORK SEPARATELY FROM THE STRUCTURE. DUCTWORK SHALL BE HELD TIGHT TO STRUCTURE EXCEPT WHERE SHOWN.

7. INSTALL ALL EQUIPMENT AND MATERIALS IN ACCORDANCE WITH MANUFACTURER'S RECOMMENDATIONS UNLESS SPECIFICALLY INDICATED OTHERWISE OR WHERE LOCAL CODES OR REGULATIONS TAKE PRECEDENCE.

8. PROVIDE MANUFACTURER'S RECOMMENDED SERVICE CLEARANCE ALL AROUND ALL EQUIPMENT REQUIRING SAME.

9. PROVIDE FOR SAFE CONDUCT OF THE WORK, CAREFUL REMOVAL AND DISPOSITION OF MATERIALS AND PROTECTION OF PROPERTY WHICH IS TO REMAIN UNDISTURBED.

10. PROVIDE ACCESS DOORS FOR ALL EQUIPMENT, VALVES, CLEANOUTS, ACTUATORS AND CONTROLS WHICH REQUIRE ACCESS FOR ADJUSTMENT OR SERVICING AND WHICH ARE LOCATED IN OTHERWISE INACCESSIBLE LOCATIONS. FOR EQUIPMENT LOCATED IN "ACCESSIBLE LOCATIONS" SUCH AS LAY-IN CEILINGS: LOCATE EQUIPMENT TO PROVIDE ADEQUATE SERVICE CLEARANCE FOR NORMAL MAINTENANCE WITHOUT REMOVING ARCHITECTURAL, ELECTRICAL OR STRUCTURAL ELEMENTS SUCH AS THE CEILING SUPPORT SYSTEM, ELECTRICAL FIXTURES, ETC. "NORMAL MAINTENANCE" INCLUDES, BUT IS NOT LIMITED TO: FILTER CHANGING; GREASING OF BEARINGS; USING P/T PORTS FOR PRESSURE OR TEMPERATURE MEASUREMENTS; SERVICING CONTROL VALVES AND SERVICING CONTROL PANELS.

11. NO DOMESTIC WATER, HEATING WATER OR CONDENSER WATER LINES SHALL BE LOCATED EXPOSED IN FINISHED SPACES OR BELOW THE BUILDING SLAB UNLESS SHOWN OTHERWISE ON THE DRAWINGS.

12. ALL CURBS, ROOF JACKS, ROOF THIMBLES, SANITARY VENTS, ROOF DRAINS, ETC. SHALL BE COMPATIBLE WITH ROOFING SYSTEM TO BE PROVIDED. REFERENCE ARCHITECTURAL DIVISION FOR REQUIRED FLASHING DETAILS.

13. THE ELECTRICAL POWER FOR CERTAIN EQUIPMENT PROVIDED UNDER DIVISIONS 21, 22 AND 23 HAVE NOT BEEN SPECIFICALLY INDICATED ON THE ELECTRICAL DRAWINGS AND MUST BE FIELD COORDINATED BY THE DIVISION REQUIRING SUCH POWER. SUCH EQUIPMENT INCLUDES, BUT IS NOT LIMITED TO:
(A) TEMPERATURE CONTROL PANELS, AND JUNCTION BOXES FOR 24V CONTROL TRANSFORMERS. REQUIRED CONNECTION ARE INCLUDED IN DIVISIONS 21, 22 AND 23 AND WILL BE SHOWN BY THAT CONTRACTOR'S CONTROL SUBMITTAL DRAWINGS.
(B) CONTRACTOR SHALL PROVIDE POWER TO THESE DEVICES AT NO EXTRA COST TO THE PROJECT. COORDINATE EXACT REQUIREMENTS AND COSTS WITH ENGINEER PRIOR TO SUBMITTING BID.

14. PROVIDE ALL REQUIRED PERMITS, INSPECTIONS AND COORDINATION WITH GOVERNING AUTHORITIES.

15. QUALITY CONTROL:
(A) QUALIFICATION OF PRODUCTS: WHEN PRODUCTS ARE SPECIFIED BY MANUFACTURER AND MODEL NUMBER, EQUIVALENT PRODUCTS BY OTHER MANUFACTURERS LISTED MAY BE PROVIDED. PRODUCT EQUIVALENCY SHALL BE DETERMINED BY ENGINEER.
(B) IF A PRODUCT SUBMITTED AS AN EQUIVALENT IS DEEMED UNACCEPTABLE TO THE ENGINEER, THE SPECIFIED PRODUCT SHALL BE PROVIDED AT NO EXTRA COST TO THE PROJECT.
(C) SUBMITTALS SHALL INCLUDE REVISED AND SUPPLEMENTED CONTROL DIAGRAMS.
(D) SUBMIT CUT-SHEETS ON ALL OF THE SPECIFIED EQUIPMENT.

16. CONTRACTOR SHALL CREATE A LOG SHEET FOR REQUIRED TESTS. THE LOG SHEET WILL HAVE A COLUMN FOR REQUIRED TESTS, A COLUMN FOR ACCEPTANCE OF TEST, A COLUMN FOR REMARKS, AND A COLUMN FOR APPROVAL SIGNATURE.

17. CONTRACTOR SHALL CREATE A LOG SHEET OF REQUIRED TRAINING. THE LOG SHEET WILL HAVE A COLUMN FOR THE TRAINED ITEM, A COLUMN FOR THE TIME, DATE AND DURATION OF THE TRAINING, AND A COLUMN FOR ACCEPTANCE OF TRAINING BY OWNER, ARCHITECT, OR ENGINEER.

18. AFTER INSTALLATION OF SYSTEM, PERFORM AN OPERATIONAL TEST IN THE PRESENCE OF THE OWNER, ARCHITECT, OR ENGINEER. THIS TEST WILL CONSIST OF SUCCESSFULLY DEMONSTRATING:
(A) APPEARANCE OF INSTALLATION.
(B) FUNCTION OF ALL CONTROLS.
(C) THE CONTROLS SHALL BE OPERATED IN THE FOLLOWING MODES IN EACH ZONE: OCCUPIED/UNOCCUPIED.
(D) IF THE TEST IS NOT SUCCESSFUL IN THE OPINION OF THE ARCHITECT OR ENGINEER, DEFICIENCIES WILL BE REMEDIED AND THE SYSTEM WILL BE RE-TESTED UNTIL THE TEST IS SUCCESSFUL. SECOND AND SUBSEQUENT TESTS WILL RESULT IN THE CONTRACTOR'S CONTRACT PAYMENT BEING REDUCED AN AMOUNT EQUAL TO 85 DOLLARS TIMES THE NUMBER OF ADDITIONAL HOURS SPENT BY THE ARCHITECT OR ENGINEER WITNESSING THE TEST. THE OWNER SHALL PAY THIS AMOUNT TO THE ARCHITECT.

19. WHERE NEW MECHANICAL SYSTEMS ARE USED FOR TEMPORARY VENTILATION OR CLIMATE CONTROL, MECHANICAL EQUIPMENT INSTALLER SHALL PROVIDE CONSTRUCTION FILTERS, MAINTAIN EQUIPMENT, AND CLEAN, ADJUST AND PUT IN NEW CONDITION BEFORE BUILDING OCCUPANCY. PARTS AND LABOR WARRANTY SHALL NOT BE CONSIDERED TO START UNTIL ACCEPTANCE OF THE SYSTEM BY OWNER.

20. PIPING:
(A) PIPE INSTALLATION:
(1) ALL PIPING SHALL BE ADEQUATELY SUPPORTED FROM THE BUILDING STRUCTURE TO PREVENT SAGGING, POCKETING, SWAYING OR DISPLACEMENT BY MEANS OF HANGERS AND SUPPORTS. PIPING IS NOT TO BE SUPPORTED BY EQUIPMENT.
(2) PROVIDE DIELECTRIC UNIONS BETWEEN DISSIMILAR MATERIALS.
(3) PROVIDE MANUAL AIR VENTS AND CAPPED HOSE-END DRAINS WITH ISOLATION VALVE AT PIPING HIGH AND LOW POINTS.
(4) WELD PIPE IN ACCORDANCE WITH APPLICABLE CODES AND STANDARDS. WELDERS SHALL BE CERTIFIED FOR TYPE OF WELD BEING PERFORMED.
(5) FLUSH OUT PIPING AND REMOVE CONTROL DEVICES BEFORE PERFORMING PRESSURE TEST. DO NOT USE PIPING SYSTEM VALVES TO ISOLATE SECTIONS WHERE TEST PRESSURE EXCEEDS VALVE PRESSURE RATING. PRESSURIZE PIPING AT 100 PSIG. IF LEAKAGE IS OBSERVED OR IF TEMPERATURE COMPENSATED PRESSURE DROP EXCEEDS 1% OF TEST PRESSURE, REPAIR LEAKS AND RETEST. DO NOT USE AIR PRESSURE TO TEST PLASTIC PIPE.
(6) PROVIDE SUPPORT UNDER ELBOWS ON PUMP SUCTION AND DISCHARGE LINES.
(7) ALL STRAINERS SHALL BE FURNISHED WITH A "ROUGHING" SCREEN AND TWO (2) SCREENS FOR NORMAL OPERATION. INSTALL STRAINER WITH ROUGHING SCREEN AND OPERATE SYSTEM FOR 24 HOURS MINIMUM (RUN DOMESTIC WATER SYSTEMS AT MAX FLOW FOR A MINIMUM OF ONE HALF (1/2) HOUR. REMOVE ROUGHING SCREEN AND INSTALL NORMAL SCREEN, AFTER TWO WEEKS OF NORMAL OPERATION INSTALL NEW NORMAL SCREEN.

21. ALL MATERIALS ABOVE THE CEILINGS WHERE THIS SPACE IS USED AS A RETURN AIR PLENUM MUST BE NON-COMBUSTIBLE. ALL COMMUNICATIONS CABLE MUST BE PLENUM RATED AND ALL ELECTRICAL WIRING MUST BE IN A PLENUM RATED SHEATH OR CONDUIT. ALL PVC PIPING MUST BE ENCASED IN AN APPROVED INSULATION WITH A FLAME AND SMOKE SPREAD RATING OF 25/50.

22. FOLLOW SMACNA GUIDELINES AND ABIDE BY UPC 2009 AND UMC 2009 CODES, WITH MODIFICATIONS AS DICTATED BY NM CID.

23. CONTRACTOR SHALL SUPERVISE AND DIRECT THE WORK USING THE CONTRACTOR'S BEST SKILL AND ATTENTION. CONTRACTOR SHALL BE SOLELY RESPONSIBLE FOR AND HAVE CONTROL OVER CONSTRUCTION MEANS, METHODS, TECHNIQUES, SEQUENCES AND PROCEDURES AND FOR COORDINATING ALL PORTIONS OF THE WORK UNDER THE CONTRACT DOCUMENTS UNLESS GIVEN OTHER SPECIFIC INSTRUCTIONS CONCERNING THESE MATTERS.

24. THESE DRAWINGS ARE ALL INCLUSIVE. WHAT IS REQUIRED OF ONE IS REQUIRED OF ALL. ANY ONE PART OF THE DRAWINGS DOES NOT TAKE PRECEDENCE OVER ANOTHER PART OF THE DRAWINGS. WHERE DISCREPANCIES OCCUR THE MOST STRINGENT REQUIREMENT SHALL GOVERN. THE MOST STRINGENT REQUIREMENT GENERALLY IMPLIES THE MOST COSTLY CONDITION. IF ANY DRAWING IS NOT CLEAR OR IF THERE ARE ANY QUESTIONS ABOUT THESE DRAWINGS, NOTIFY THE ENGINEER(S). IN THE EVENT THE CONTRACTOR DOES NOT NOTIFY THE ENGINEER(S), THE CONTRACTOR ASSUMES FULL RESPONSIBILITY AND EXPENSE FOR ANY REVISIONS NECESSARY.

25. ALL MATERIAL PROVIDED BY CONTRACTOR SHALL BE NEW (UNLESS OTHERWISE NOTED) AND NOT DAMAGED. CONTRACTOR SHALL NOT INSTALL MATERIAL DAMAGED DURING CONSTRUCTION, NEW OR USED, AND SHALL REPLACE DAMAGED MATERIAL AT CONTRACTOR'S EXPENSE.

26. ALL WORK OF THIS PROJECT SHALL CONFORM TO THE REQUIREMENTS IN THE LATEST ADOPTED EDITIONS OF:

NEW MEXICO ADMINISTRATIVE CODE (NMAC)
INTERNATIONAL BUILDING CODE (IBC)
UNIFORM PLUMBING CODE (UPC)
UNIFORM MECHANICAL CODE (UMC)
NATIONAL ELECTRIC CODE (NEC)
INTERNATIONAL ELECTRIC CODE (IEC)
ALL APPLICABLE LOCAL CODES AND ORDINANCES

27. CONTRACTOR SHALL CAREFULLY STUDY AND COMPARE THE CONTRACT DOCUMENTS WITH EACH OTHER AND WITH INFORMATION FURNISHED BY THE ENGINEER(S). CONTRACTOR SHALL VERIFY ALL DIMENSIONS AND NOTIFY ENGINEER(S) OF ANY DISCREPANCIES OR QUESTIONS PRIOR TO PERFORMING THE WORK. IN THE EVENT THE CONTRACTOR DOES NOT NOTIFY THE ENGINEER(S), THE CONTRACTOR ASSUMES FULL RESPONSIBILITY AND EXPENSE FOR ANY REVISIONS NECESSARY.

28. CONTRACTOR SHALL NOTIFY THE ENGINEER(S) OF ANY PROPOSED REVISIONS TO THE DRAWINGS AND OBTAIN WRITTEN APPROVAL PRIOR TO PERFORMING THE WORK. IN THE EVENT THE CONTRACTOR DOES NOT NOTIFY THE ENGINEER(S), THE CONTRACTOR ASSUMES FULL RESPONSIBILITY AND EXPENSE FOR ANY REVISIONS NECESSARY.

29. THE CONTRACTOR SHALL FIELD VERIFY ALL DIMENSIONS AND CONDITIONS OF EXISTING CONSTRUCTION AND REPORT ANY INCONSISTENCIES TO THE ENGINEER BEFORE PROCEEDING WITH WORK AFFECTED BY SUCH INCONSISTENCIES. THE CONTRACTOR IS RESPONSIBLE FOR OBTAINING THE INTENT OF THE DESIGN AS SHOWN ON THE PLANS. ACTUAL CONDITIONS SHALL GOVERN OVER WRITTEN DIMENSIONS, WRITTEN DIMENSIONS SHALL GOVERN OVER ACTUAL DRAWING REPRESENTATION. ATTEMPTS TO UTILIZE SCALING OR ELECTRONIC MEANS TO DETERMINE QUANTITY TAKE-OFF MAY BE AFFECTED BY NOT-TO-SCALE ITEMS. THE CONSULTING ENGINEER IS NOT RESPONSIBLE FOR, AND SHALL NOT BE HELD LIABLE FOR THE ACCURACY OF RESULTS OF SUCH TAKE OFFS.

30. ALL WORK ON THIS PROJECT SHALL BE PERFORMED IN ACCORDANCE WITH APPLICABLE FEDERAL, STATE AND LOCAL LAWS, RULES AND REGULATIONS CONCERNING CONSTRUCTION SAFETY AND HEALTH.

31. THE CONTRACTOR SHALL NOT INSTALL ITEMS AS SHOWN ON THE PLANS WHEN IT IS OBVIOUS THAT FIELD CONDITIONS ARE DIFFERENT THAN SHOWN IN THE DESIGN. SUCH CONDITIONS SHALL BE BROUGHT TO THE ATTENTION OF THE ENGINEER. IN THE EVENT THE CONTRACTOR DOES NOT NOTIFY THE ENGINEER, THE CONTRACTOR ASSUMES FULL RESPONSIBILITY AND EXPENSE FOR ANY REVISIONS NECESSARY. THE ENGINEER OF RECORD SHALL NOT BE RESPONSIBLE FOR THE CONTRACTOR'S FAILURE TO CARRY OUT THE CONSTRUCTION WORK IN ACCORDANCE WITH THE CONTRACT DOCUMENTS, NOR SHALL THE ENGINEER BE REQUIRED TO SUPERVISE THE CONDUCT OF THE WORK OR THE CONSTRUCTION PROCEDURES AND SAFETY PROCEDURES FOLLOWED BY THE CONTRACTOR OR THE SUBCONTRACTOR OR THEIR RESPECTIVE EMPLOYEES OR BY ANY OTHER PERSON AT THE JOB SITE OTHER THAN THAT OF THE ENGINEER'S EMPLOYEES.

32. CONTRACTOR AGREES TO ASSUME SOLE AND COMPLETE RESPONSIBILITY FOR THE JOB SITE CONDITIONS DURING THE COURSE OF CONSTRUCTION OF THIS PROJECT, INCLUDING SAFETY OF ALL PERSONS AND PROPERTY; THAT THIS REQUIREMENT SHALL APPLY 24 HOURS A DAY AND NOT BE LIMITED TO NORMAL WORKING HOURS; AND THAT THE CONTRACTOR SHALL DEFEND, INDEMNIFY AND HOLD THE OWNER, ARCHITECT AND ENGINEER HARMLESS OF ANY AND ALL LIABILITY, REAL OR ALLEGED, IN CONNECTION WITH THE PERFORMANCE OF WORK ON THE PROJECT, EXCEPTING LIABILITY ARISING FROM THE SOLE NEGLIGENCE OF THE OWNER, ARCHITECT OR THE ENGINEER.

33. CONTRACTOR SHALL SUPERVISE AND DIRECT THE WORK USING THE CONTRACTOR'S BEST SKILL AND ATTENTION. CONTRACTOR SHALL BE SOLELY RESPONSIBLE FOR AND HAVE CONTROL OVER CONSTRUCTION MEANS, METHODS, TECHNIQUES, SEQUENCES AND PROCEDURES AND FOR COORDINATING ALL PORTIONS OF THE WORK UNDER THE CONTRACT DOCUMENTS UNLESS GIVEN OTHER SPECIFIC INSTRUCTIONS CONCERNING THESE MATTERS.

34. OWNER HAS FIRST RIGHT OF REFUSAL ON ALL EXISTING EQUIPMENT, FIXTURES, MATERIALS, ETC. BEING REMOVED AS PART OF THIS PROJECT.

35. ROOF-MOUNTED APPLIANCES, EQUIPMENT, FANS, OR OTHER COMPONENTS THAT REQUIRE SERVICE: LOCATE A MINIMUM OF 10 FEET FROM ROOF EDGES AND PARAPETS.

GENERAL MECHANICAL NOTES:

A. CONTRACTOR TO VERIFY AND COORDINATE W/ ELECTRICAL ENGINEER AND CONTRACTOR FOR WIRING AND POWER REQUIRED.

B. ALL RECTANGULAR DUCT TO BE INSTALLED PER DETAIL C3/M-501. ROUND DUCT SHALL BE SUPPORTED WITH DUCT STRAPS AND INSTALLED PER DETAIL A5/M-501.

C. COORDINATE EXACT LOCATION OF ALL THERMOSTATS WITH MECHANICAL ENGINEER & OWNER.

D. ALL ROUND DUCT JUNCTIONS, TEES, AND ELBOWS SHALL BE CONSTRUCTED AND CONNECTED PER DETAIL C6/M-501. ALL RECTANGULAR 90° ELBOWS SHALL BE INSTALLED WITH TURNING VANES, PER DETAIL A5/M-501.

E. ALL DUCT TRANSITIONS TO USE 30°/60° TRANSITIONS.

F. ALL ROUND AND RECTANGULAR DUCT SHALL HAVE 1-1/2" EXTERNAL HIGH-DENSITY DUCT WRAP INSULATION, EXCEPT WHERE EXPOSED IN SPACE. ALL INSULATION LOCATED IN BUILDING SHALL HAVE A FLAMESPREAD INDEX NOT GREATER THAN TWENTY-FIVE (25) AND A SMOKE DEVELOPED INDEX NOT GREATER THAN FIFTY (50), WHEN TESTED IN ACCORDANCE WITH NFPA 255, METHOD OF TEST OF BURNING CHARACTERISTICS OF BUILDING MATERIALS, OR IN ACCORDANCE WITH ASTM E 84, SURFACE BURNING CHARACTERISTICS OF BUILDING MATERIALS, OR IN ACCORDANCE WITH THE PROVISIONS OF UL 723, TEST FOR SURFACE BURNING CHARACTERISTICS OF BUILDING MATERIALS.

G. CONTRACTOR TO PRIME AND PREP ALL EXPOSED DUCTWORK, FINAL FINISH SHALL BE DETERMINED BY ARCHITECT. ALL DUCTWORK INSTALLED ON THE BUILDING EXTERIOR SHALL HAVE 2", HIGH-DENSITY WEATHERPROOF INSULATION, SEALED AND TAPED. ACOUSTICALLY LINE FIRST 6' OF NEW SUPPLY AND RETURN DUCT FROM ROOFTOP UNITS. ALL DUCT DIMENSIONS SHOWN ON DRAWINGS ARE AIR FLOW SIZES.

H. ALL JOINTS AND SEAMS ON SUPPLY AND RETURN AIR DUCTS SHALL BE SEALED AIRTIGHT WITH HEAVY MASTIC DUCT SEALANT, LISTED AND LABELED IN ACCORDANCE WITH UL 181A AND UL 181B. MASTICS USED TO SEAL GALVANIZED AND METAL DUCTWORK SHALL BE MARKED "181A-M". MASTICS USED TO SEAL FLEXIBLE DUCTS SHALL BE MARKED "181B-FX". MASTICS USED TO SEAL FLEXIBLE NON-METALLIC DUCTS SHALL BE MARKED "181B-C". UNLISTED DUCT TAPE IS NOT ACCEPTABLE.

I. ENSURE THAT THE INSIDE RADIUS OF ALL BENDS, USING FLEXIBLE DUCT, IS EQUAL TO OR GREATER THAN THE DUCT DIAMETER. ATTACH ALL FLEXIBLE DUCT TO HARD DUCT OR AIR TERMINAL DEVICE USING MINIMUM OF THREE (3) SCREWS TO SECURE WIRE AND MECHANICAL BAND (PANDUIT STRAP) TO SECURE INSIDE HOUSING. MECHANICAL TAPE MAY BE USED TO SEAL OUTER JACKETING FOR FINISH, DUCT TAPE IS NOT ACCEPTABLE.

J. THE SHEET METAL CONTRACTOR SHALL BE RESPONSIBLE FOR COORDINATING THE INSTALLATION OF THE DUCTWORK TO ALLOW ADEQUATE CLEARANCE OF THE LIGHTING FIXTURES AND TO AVOID STRUCTURAL MEMBERS OR OTHER CEILING EQUIPMENT. THE CONTRACTOR SHALL COORDINATE WITH ALL OTHER TRADES TO AVOID CONFLICTS IN THE CEILING SPACE.

K. INSTALL THERMOSTATS & SENSORS AT SWITCH HEIGHTS. WHERE THESE ARE INSTALLED ON EXTERIOR OR COLD/HOT WALLS, THERMOSTATS & SENSORS SHALL BE INSTALLED ON INSULATED BASES TO ENSURE PROPER OPERATION.

L. WHERE THERMOSTAT GUARD OR LOCK BOX IS REQUIRED, CONTRACTOR SHALL USE MODEL BTG-54VL BY BEKO (UNLESS NOTED OTHERWISE), OR APPROVED EQUAL. LOCK BOX SHALL BE METAL WITH HINGED COVER. COORDINATE WHERE COVERS ARE REQUIRED WITH OWNER.

M. THE TEST AND BALANCE CONTRACTOR SHALL ADJUST AIRFLOW PER THE FLOOR PLAN DIFFUSER CALL-OUTS WITHOUT CREATING EXCESSIVE NOISE. KEEP AIR NOISE AT A NORMAL RTU/MAU LEVEL.

N. KEEP ALL NEW DUCTS TIGHT TO BOTTOM OF JOISTS. WHERE CROSS-OVERS OCCUR DUCT RUNNING PARALLEL WITH JOISTS SHALL BE INSTALLED ABOVE OTHER, IN JOIST SPACE. CEILING HEIGHTS DETERMINED MUST BE MAINTAINED.

O. ALL EQUIPMENT SHALL BE INSTALLED LEVEL.

P. CONTRACTOR SHALL COORDINATE ALL PROPOSED MECHANICAL EQUIPMENT, WITH OTHER TRADES, TO AVOID CONFLICTS. CONTRACTOR SHALL INSTALL MAINTAIN ADEQUATE EQUIPMENT ACCESS AND SERVICEABILITY TO ALL VALVES AND EQUIPMENT.

Q. ALL EQUIPMENT SHALL BE INSTALLED PER MANUFACTURER'S RECOMMENDATIONS. INSTALLATIONS SHALL BE COORDINATED WITH THE ARCHITECTURAL PLANS AND STRUCTURAL.

R. COORDINATE ALL WALL DUCT PENETRATIONS PER DETAILS E3/M-501. UNLESS OTHERWISE SPECIFIED.

S. SEE M-500 SHEETS FOR HVAC DETAILS. SEE M-600 SHEETS FOR MECHANICAL DIAGRAMS, SCHEDULES AND SEQUENCES OF OPERATIONS.

T. COORDINATE LOCATION OF ALL CEILING MOUNTED EQUIPMENT WITH ACTUAL CONDITIONS.

U. ALL RECTANGULAR AND ROUND TAKEOFF DUCT SHALL BE INSTALLED PER DETAILS A1 & B1/M-501.

V. SEE DETAIL A3/M-501 FOR ALL DUCT ACCESS DOOR INSTALLATIONS. REFER TO SPECIFICATIONS FOR REQUIREMENTS.

W. CONTRACTOR TO INSTALL WEATHERPROOF, FLEXIBLE CONNECTIONS AT ALL DUCT CONNECTIONS TO AIR-MOVING EQUIPMENT. SEE G1/M-501 FOR FLEXIBLE CONNECTION DETAIL. REFER TO SPECIFICATIONS FOR REQUIREMENTS.

X. ALL PIPING AND PIPING WALL PENETRATIONS SHALL BE INSTALLED PER DETAILS E5, E7 & E9/M-501.

Y. CONTRACTOR SHALL INSTALL 1-1/2" INSULATION/ACOUSTICAL PIPE WRAP FOR BOTH SUPPLY AND RETURN REFRIGERANT PIPING. SUGGESTED SUPPLIER: OSHEX B-10A LAG OR EQUIVALENT.

Z. COORDINATE LOCATION OF ALL DIFFUSERS, REGISTERS AND GRILLES WITH ARCHITECTURAL CEILING PLAN.

AA. ALL ROUND BRANCH DUCT TO DIFFUSER/GRILLES SHALL BE THE SAME SIZE AS THE DIFFUSER/GRILLE NECK, UNLESS NOTED OTHERWISE.

AB. INSTALL GROUND MOUNTED ROOFTOP UNIT PER DETAIL G7/M-501.

AC. ALL DUCT/STRUCTURAL CONFLICTS SHALL BE INSTALLED PER DETAIL A7/M-501. COORDINATE WITH ENGINEER PRIOR TO INSTALLATION.

AD. INSTALL ALL RETURN AIR GRILLES WITH SOUND BOOT PER DETAIL D1/M-501.

AE. ALL ROUND DUCT SHALL BE INSTALLED PER DETAIL E1/M-501. RECTANGULAR DUCT SHALL BE INSTALLED PER DETAIL C3/M-501/

AF. INSTALL EXPOSED SPIRAL DUCT IN TRAINING ROOM PER DETAIL G9/M-501 WITH DUCT MOUNTED DIFFUSER AT 45º FROM VERTICAL TO CONDITIONED SPACE.

AG. INSTALL DUCT ACCESS DOOR PER DETAIL A3/M-501.

HVAC CONTROLS LEGEND

MARK	DEFINITION
T	THERMOSTAT
TS	TEMPERATURE SENSOR

WILSON & COMPANY
4900 LANG AVENUE NE
ALBUQUERQUE, NM 87109
PHONE: (505) 348-4000

CONSULTANTS

SEAL

MARK W. WENTZEL
NEW MEXICO
17012
REGISTERED PROFESSIONAL ENGINEER
7-15-2015

PROJECT NAME:
OTERO COUNTY
EMERGENCY OPERATIONS CENTER
ALAMOGORDO, NM

MARK	DATE	DESCRIPTION
-	07-15-15	PERMIT DOCUMENTS

PROJECT NO: 15-600-204-01

DRAWN BY KFD

CHECKED BY MWW

SHEET TITLE
MECHANICAL GENERAL NOTES & LEGENDS

M-001

SHEET ____ OF ____

7/20/2015 2:45:58 PM

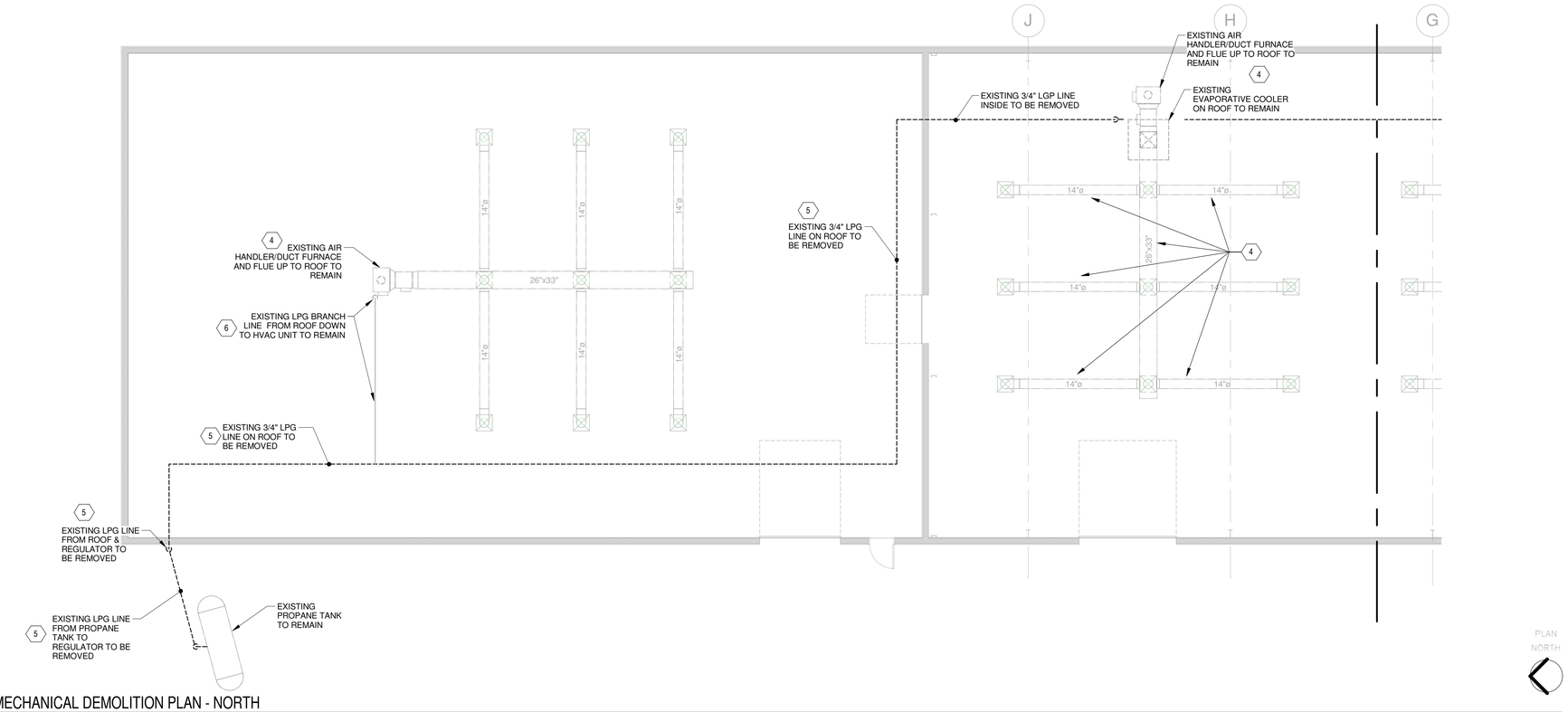

E1 MECHANICAL DEMOLITION PLAN - NORTH

NTS

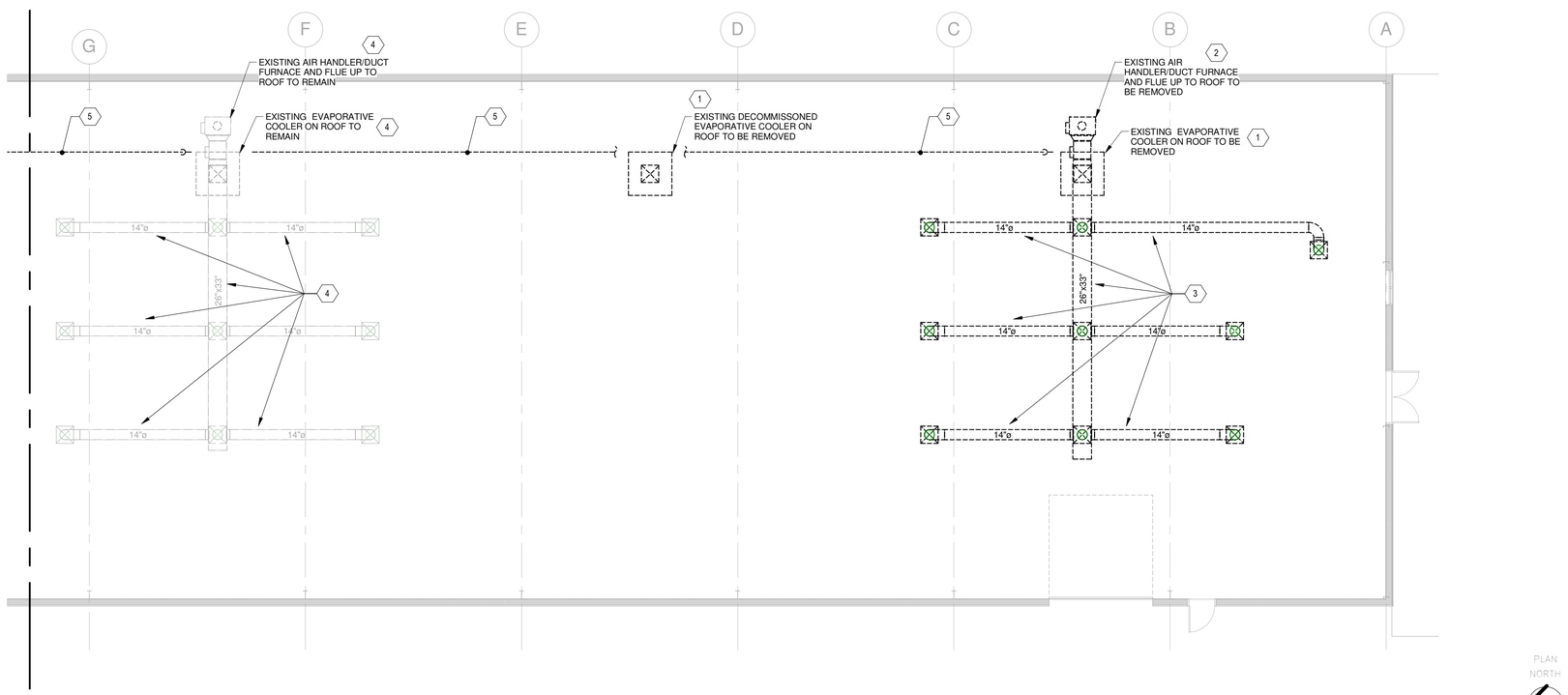

A1 MECHANICAL DEMOLITION PLAN - SOUTH

1/8" = 1'-0"

GENERAL SHEET NOTES

1. A LICENSED AND BONDED CONTRACTOR SHALL BE USED FOR INSTALLATION. UPC, UMC AND LOCAL CODES SHALL BE FOLLOWED DURING INSTALLATION.
2. CONTRACTOR TO VERIFY AND COORDINATE STRUCTURAL SUPPORT AND OPENINGS IN FLOOR, ROOF, AND WALLS.
3. CONTRACTOR TO LOCATE AND VERIFY LOCATION OF EXISTING PIPING, VALVES, EQUIPMENT, AND ALL HVAC RELATED MATERIALS WITHIN THE SCOPE OF WORK. DIMENSIONS AND LOCATIONS SHOWN ON THE PLANS ARE APPROXIMATE. ALL DUCT, PIPING, WIRING, EQUIPMENT TO BE DEMOLISHED MAY INCLUDE MORE THAN WHAT IS SHOWN ON THE PLANS. CONTRACTOR IS RESPONSIBLE FOR DEMOLISHING ALL HVAC-RELATED MATERIAL IN THE AREAS SHOWN, DESPITE WHETHER OR NOT THESE ITEMS ARE GRAPHICALLY SHOWN.
4. CONTRACTOR IS RESPONSIBLE FOR EFFECTIVELY REMOVING ALL EQUIPMENT AND MATERIALS WITHOUT DAMAGING EXISTING MATERIALS OR STRUCTURES THAT ARE TO REMAIN. IF SUCH DAMAGE OCCURS, CONTRACTOR SHALL REPAIR AND/OR REPLACE DAMAGED MATERIALS WITH NO COST TO THE OWNER. ANY SYSTEMS/EQUIPMENT/DUCT/ETC THAT TRAVERSE THIS DEMOLITION AREA AND SERVE ADJACENT OCCUPIED SPACES SHALL REMAIN. CONTRACTOR SHALL VERIFY ALL SUCH SCENARIOS WITH MECHANICAL ENGINEER.
5. OWNER SHALL HAVE FIRST RIGHT OF REFUSAL ON ALL REMOVED EQUIPMENT AND MATERIAL.
6. CONTRACTOR TO VERIFY AND COORDINATE W/ ELECTRICAL ENGINEER AND CONTRACTOR FOR WIRING AND POWER REQUIRED.
7. CONTRACTOR TO VERIFY AND COORDINATE STRUCTURAL SUPPORT AND OPENINGS IN FLOOR, ROOF, AND WALLS.
8. ALL PIPING, EQUIPMENT AND HVAC RELATED MATERIALS SHOWN TO REMAIN WITHIN THE SCOPE OF WORK SHALL BE INSPECTED AND REPAIRED TO ENSURE DUCT WORK IS FREE OF LEAKS AND SYSTEMS ARE OPERATING AS ORIGINALLY INTENDED.
9. SEE SHEET M-601 FOR MECHANICAL DIAGRAMS AND SCHEDULES.

SHEET KEYNOTES

1. EXISTING EVAPORATIVE COOLER ON ROOF, SUPPLY AIR DUCT AND ALL ASSOCIATED MATERIALS SHALL BE REMOVED AND DISPOSED OF. CONTRACTOR TO REMOVE CONDUIT, WIRING, WATER LINE AND ALL ASSOCIATED ELECTRICAL EQUIPMENT BACK TO SOURCE. COORDINATE WITH ARCHITECTURAL SHEETS FOR PATCHING AND REPAIR OF ROOF.
2. EXISTING AIR HANDLER/HEATER SHALL BE REMOVED AND DISPOSED OF. CONTRACTOR SHALL REMOVE ALL ASSOCIATED MATERIALS, THERMOSTATS, FLUE, GAS PIPING & WIRING BACK TO SOURCE.
3. EXISTING SUPPLY AIR DIFFUSERS, DUCT, INSULATION, SUPPORTS AND ALL RELATED MATERIALS SHALL BE REMOVED AND DISPOSED OF.
4. EXISTING AIR HANDLER/HEATER/EVAPORATIVE COOLER/SUPPLY DUCT SHALL REMAIN IN PLACE.
5. EXISTING LPG LINE SHALL SHALL BE REMOVED DISPOSED OF BACK TO SOURCE. EXISTING PROPANE TAKE SHALL REMAIN IN PLACE. REFER TO PLUMBING SHEETS FOR ROUTING OF NEW LPG LINE.
6. EXISTING LPG BRANCH LINE DOWN TO EXISTING DUCT FURNACE TO REMAIN SHALL REMAIN IN PLACE AND BE RECONNECTED IN NEW LPG LINE. REFER TO PLUMBING PLANS FOR ROUTING OF NEW LPG LINE.

WILSON & COMPANY
4900 LANG AVENUE NE
ALBUQUERQUE, NM 87109
PHONE: (505) 348-4000

CONSULTANTS

SEAL

MARK W. WENTZEL
NEW MEXICO
17012
LICENSED PROFESSIONAL ENGINEER
7-15-2015

PROJECT NAME:
OTERO COUNTY
EMERGENCY OPERATIONS CENTER
ALAMOGORDO, NM

MARK	DATE	DESCRIPTION
-	07-15-15	PERMIT DOCUMENTS

PROJECT NO: 15-600-204-01

DRAWN BY KFD

CHECKED BY MWW

SHEET TITLE
MECHANICAL DEMOLITION PLAN

MD101

SHEET ___ OF ___

7/20/2015 2:46:07 PM

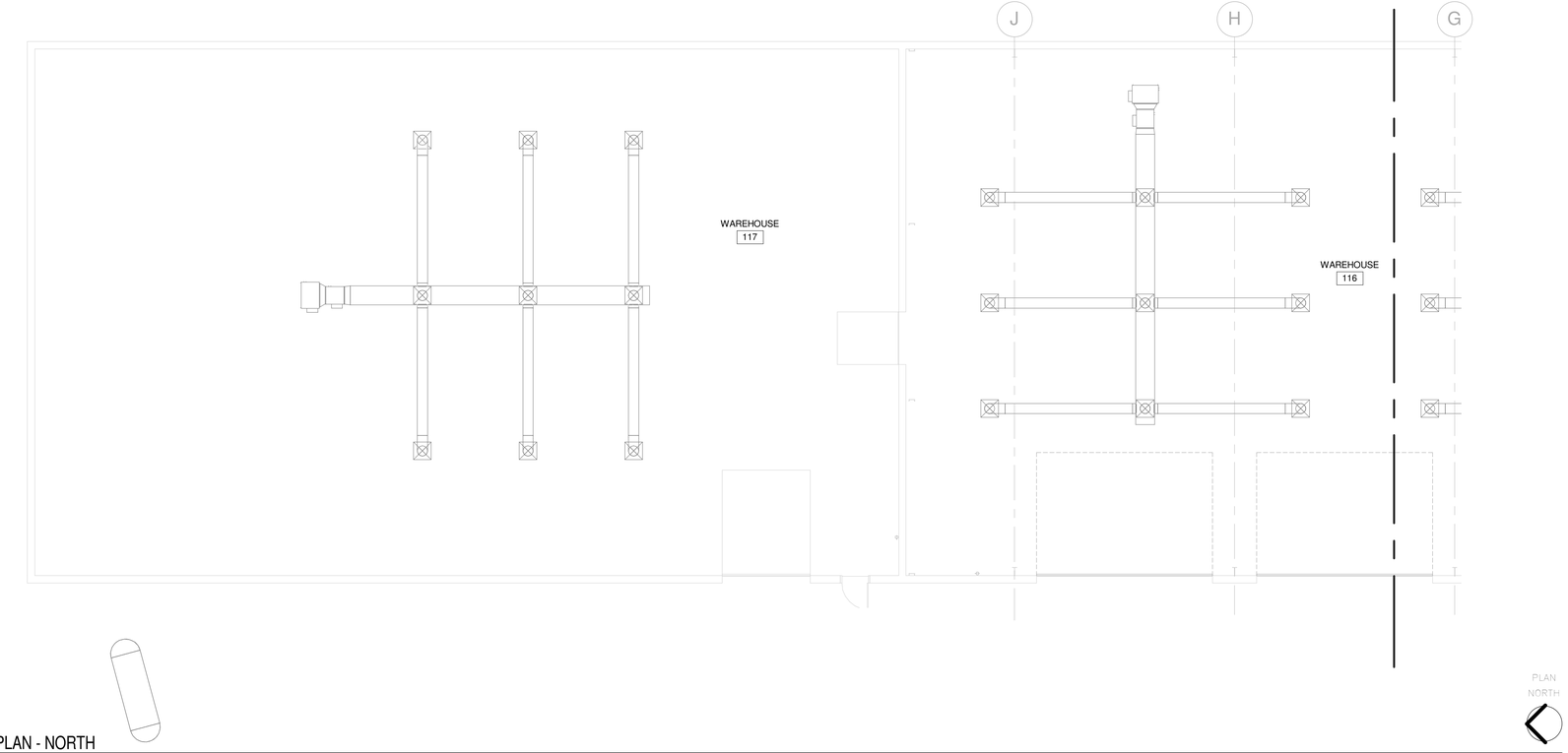

E1 MECHANICAL HVAC PLAN - NORTH
1/8" = 1'-0"

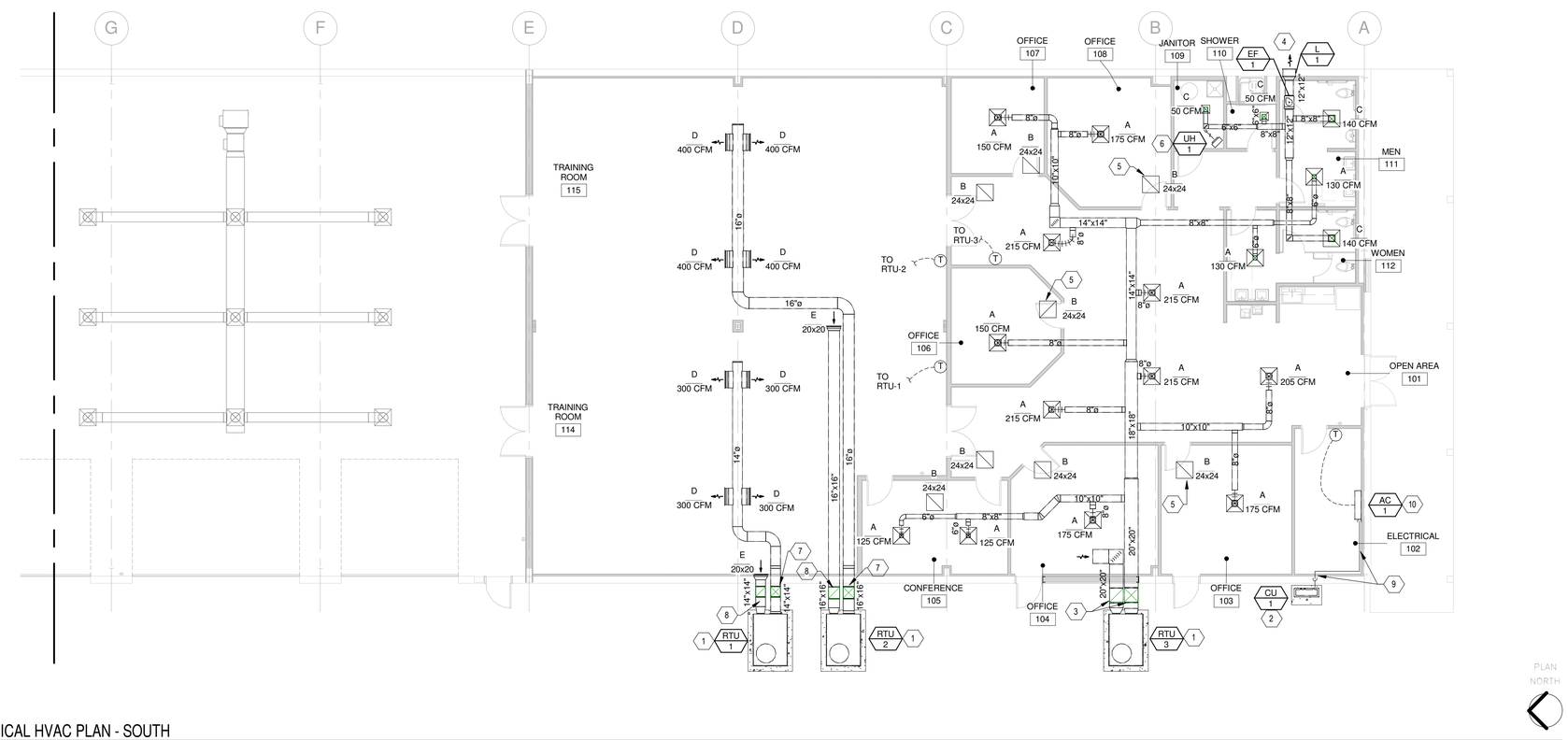

A1 MECHANICAL HVAC PLAN - SOUTH
1/8" = 1'-0"

GENERAL SHEET NOTES

1. ALL WORK SHALL BE PERFORMED IN STRICT ACCORDANCE WITH THE CONSTRUCTION DOCUMENTS AND WITH THE LATEST EDITION OF THE PREVAILING STATE MECHANICAL/PLUMBING AND BUILDING CODES AS WELL AS ALL REGULATIONS THAT MAY APPLY. IN CASE OF CONFLICT BETWEEN THE CONTRACT DOCUMENTS AND GOVERNING CODE OR ORDINANCE, THE MORE STRINGENT STANDARD SHALL APPLY.
2. DO NOT ROUTE ANY PLUMBING, PIPING, DUCTWORK, ETC. OVER ANY ELECTRICAL PANELS.
3. PROVIDE TURNING VANES IN ALL RECTANGULAR ELBOWS.
4. PROVIDE FLEXIBLE DUCT AT ALL CONNECTIONS TO EQUIPMENT.
5. CONTRACTOR TO COORDINATE DUCT LOCATIONS WITH JOIST LAYOUT AND STRUCTURAL AND ADJUST WHERE NECESSARY.
6. SEE M-500 SHEETS FOR MECHANICAL DETAILS. SEE M-600 SHEETS FOR MECHANICAL SCHEDULES.
7. CONTRACTOR TO VERIFY AND COORDINATE W/ ELECTRICAL ENGINEER AND CONTRACTOR FOR WIRING AND POWER REQUIRED.
8. CONTRACTOR TO VERIFY AND COORDINATE STRUCTURAL SUPPORT AND OPENINGS IN FLOOR, ROOF, AND WALLS
9. CONTRACTOR TO COORDINATE WITH MECHANICAL ENGINEER ON ANY OBSTRUCTIONS OR CONFLICTS REGARDING THE PROPOSED MECHANICAL LAYOUT.
10. CONTRACTOR TO ENSURE MECHANICAL UNITS, VALVES, FIRE DAMPERS AND ALL EQUIPMENT INSTALLED ARE INSTALLED WITH PROPER MAINTENANCE ACCESS.
11. COORDINATE WITH OWNER FOR EXACT LOCATION OF THERMOSTATS AND CONTROLS. CONTRACTOR SHALL NOTIFY ENGINEER OF ANY CHANGES IN ORDER TO VERIFY FUNCTIONALITY.
12. DIFFUSER NECK SIZE SHALL MATCH DUCT RUN-OUT SIZE, UNLESS OTHERWISE NOTED ON PLANS, TYPICAL.

SHEET KEYNOTES

1. INSTALL NEW GROUND MOUNTED ROOFTOP UNIT PER MANUFACTURER'S REQUIREMENTS ON 4" CONCRETE HOUSEKEEPING PAD AND TO MAINTAIN PROPER CLEARANCE AROUND ENTIRE UNIT FOR MAINTENANCE ACCESS. REFER TO DETAIL G7/M-501.
2. INSTALL NEW CONDENSING UNIT PER MANUFACTURER'S REQUIREMENTS ON 4" CONCRETE HOUSEKEEPING PAD AND TO MAINTAIN PROPER CLEARANCE AROUND ENTIRE UNIT FOR MAINTENANCE ACCESS.
3. ROUTE 20"x20" SUPPLY/RETURN DUCT FROM GROUND MOUNTED ROOFTOP UNIT (RTU-3) UP EXTERIOR WALL, PENETRATE WALL AS HIGH AS POSSIBLE AND ROUTE IN CEILING SPACE AS SHOWN.
4. INSTALL NEW INLINE EXHAUST FAN PER MANUFACTURER'S REQUIREMENTS AND MAINTAIN PROPER CLEARANCES FOR MAINTENANCE ACCESS. ROUTE EXHAUST DUCT FROM EXHAUST FAN AND TERMINATE WITH LOUVER INSTALLED AT 10'-6" AFF.
5. INSTALL RETURN AIR GRILLES PER DETAIL D1/M-501, TYPICAL.
6. INSTALL NEW ELECTRIC UNIT HEATER PER MANUFACTURER'S REQUIREMENTS. PROVIDE WITH UNIT MOUNTED THERMOSTAT.
7. ROUTE SUPPLY DUCT FROM GROUND MOUNTED ROOFTOP UNIT (RTU-1 & 2) UP EXTERIOR WALL, PENETRATE WALL AS HIGH AS POSSIBLE AND ROUTE AS SHOWN.
8. ROUTE RETURN AIR DUCT FROM GROUND MOUNTED ROOFTOP UNIT (RTU-1 & 2) UP EXTERIOR WALL, PENETRATE WALL AS HIGH AS POSSIBLE AND TERMINATE WITH 20"x20" RETURN AIR GRILLE.
9. REFRIGERANT PIPING FROM CONDENSING UNIT SHALL PENETRATE WALL AT LOCATION SHOWN AND ROUTED TO ASSOCIATED INDOOR UNIT (AC-1).
10. INSTALL INDOOR WALL MOUNTED AIR CONDITIONING UNIT PER MANUFACTURER' S REQUIREMENTS. COORDINATE MOUNTING HEIGHT WITH OWNER AND INSTALLED ELECTRICAL EQUIPMENT. REFER TO PLUMBING SHEETS FOR ROUTING OF CONDENSATE LINE.

WILSON & COMPANY
4900 LANG AVENUE NE
ALBUQUERQUE, NM 87109
PHONE: (505) 348-4000

CONSULTANTS

SEAL
MARK W. WENTZEL
NEW MEXICO
17012
LICENSED PROFESSIONAL ENGINEER
7-15-2015

PROJECT NAME:
OTERO COUNTY
EMERGENCY OPERATIONS CENTER
ALAMOGORDO, NM

MARK	DATE	DESCRIPTION
-	07-15-15	PERMIT DOCUMENTS

PROJECT NO: 15-600-204-01
DRAWN BY KFD
CHECKED BY MWW
SHEET TITLE
MECHANICAL HVAC PLAN

M-101
SHEET ___ OF ___

7/20/2015 2:46:01 PM

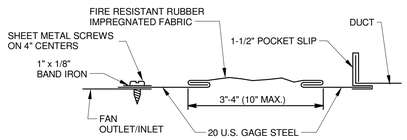

G1 FLEX DUCT CONNECTION DETAIL

NTS

HANGER STRAPS OR RODS			
MAX. DUCT □ IN. [mm]	QUANTITY/SIZE IN. [mm]	MAX. LOAD LBS. [kg]	MAX. SPACING IN. [mm]
26 [650]	ONE 1 [25] x 22 GA STRAP	260 [119]	144 [3658]
36 [900]	ONE 1 [25] x 18 GA STRAP	420 [190]	144 [3658]
50 [1250]	ONE 1 [25] x 16 GA STRAP	700 [317]	144 [3658]
60 [1500]	TWO 3/8 [10]Ø RODS	1320 [598]	144 [3658]
84 [2100]	TWO 1/2 [13]Ø RODS	2500 [1133]	144 [3658]

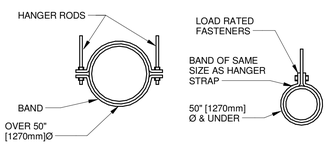

NOTE:
TABULATED DATA FROM SMACNA ALLOWS FOR DUCT REINFORCING AND INSULATION, BUT NO EXTERNAL LOAD.

E1 ROUND DUCT HANGER DETAIL

NTS

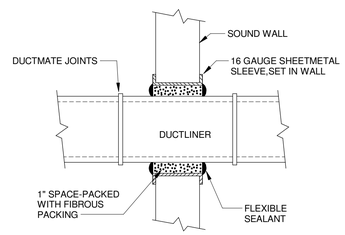

E3 DUCT THRU WALL DETAIL

NTS

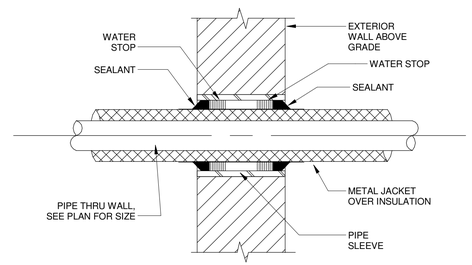

E5 PIPE THRU WALL PENETRATION

NTS

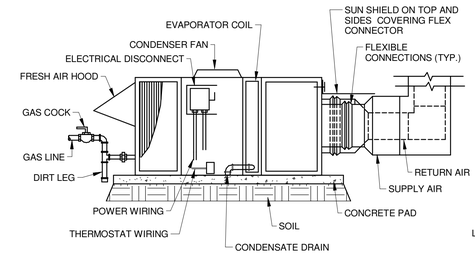

NOTES:

1. DISCONNECT SWITCHES, BRACKETS, AND CONDUITS MUST BE TO STRUCTURAL MEMBERS OF UNIT.

G7 TYPICAL GROUND MOUNTED RTU INSTALLATION

NTS

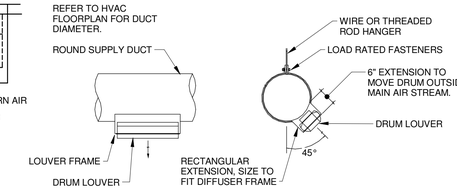

G9 DUCT MOUNTED DIFFUSER AT 45 DEG

NTS

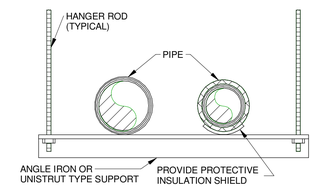

E7 TRAPEZE PIPE HANGER DETAIL

NTS

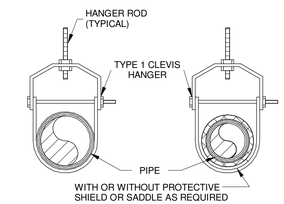

E9 SINGLE PIPE HANGER DETAIL

NTS

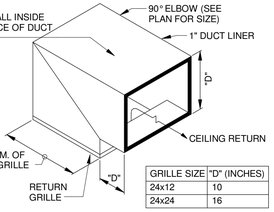

GRILLE SIZE	"D" (INCHES)
24x12	10
24x24	16

D1 RETURN AIR GRILLE WITH SOUND BOOT

NTS

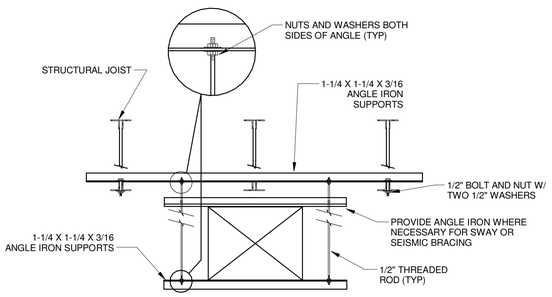

C3 RECTANGULAR DUCT HANGER DETAIL

NTS

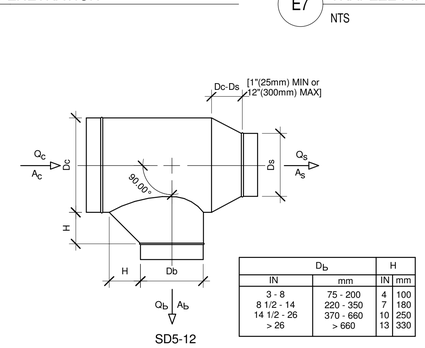

D_b		H	
IN	mm	IN	mm
3 - 8	75 - 200	4	100
8 1/2 - 14	220 - 350	7	180
14 1/2 - 26	370 - 660	10	250
> 26	> 660	13	330

D_{b1} & D_{b2}		H	
IN	mm	IN	mm
3 - 8	75 - 200	4	100
8 1/2 - 14	220 - 350	7	180
14 1/2 - 26	370 - 660	10	250
> 26	> 660	13	330

C6 ROUND JUNCTION FITTINGS DETAILS

NTS

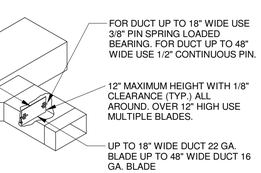

NOTE:
UP TO 12" DEEP DUCT - ONE BLADE UP TO 20" DEEP DUCT - TWO BLADES UP TO 30" DEEP DUCT - THREE BLADES

B1 RECTANGULAR TAKE-OFF

NTS

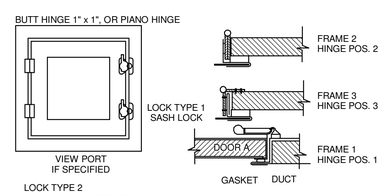

	DOOR SIZE	NO. HINGES	NO. LOCKS	METAL GAGE		
				FRAME	DOOR	BACK
2" W.G. STATIC AND LESS	12" x 12"	2	1-S	24	26	26
	16" x 20"	2	2-S	22	24	26
	24" x 24"	3	2-S	22	22	26
S = SIDE OPPOSITE HINGES, T = TOP, B = BOTTOM						

A3 DUCT ACCESS DOOR DETAIL

NTS

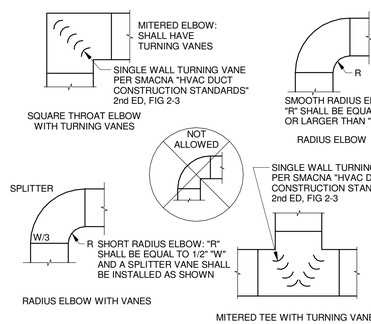

A5 RECT ELBOW AND TEE DETAILS

NTS

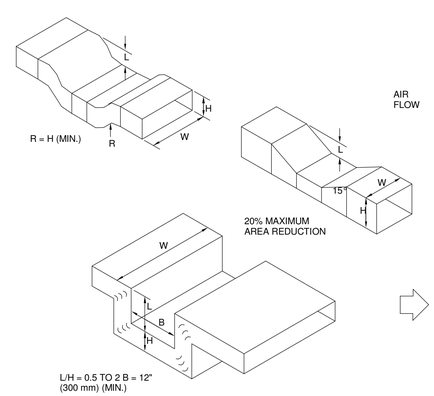

DUCT "VENTURI" DEPRESSION DETAIL

NOTE: USE DETAIL WHERE REQUIRED BY FIELD CONDITIONS.

A7 DUCT DEPRESSION FOR STURCTURAL CONFLICTS

NTS

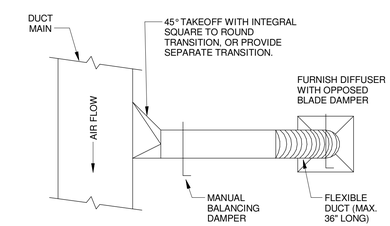

A1 ROUND TAKE-OFF

NTS

WILSON & COMPANY
4900 LANG AVENUE NE
ALBUQUERQUE, NM 87109
PHONE: (505) 348-4000

CONSULTANTS

SEAL

MARK W. WENTZEL NEW MEXICO 17012 LICENSED PROFESSIONAL ENGINEER
7-15-2015

PROJECT NAME:
OTERO COUNTY EMERGENCY OPERATIONS CENTER
ALAMOGORDO, NM

MARK	DATE	DESCRIPTION
-	07-15-15	PERMIT DOCUMENTS

PROJECT NO: 15-600-204-01

DRAWN BY KFD

CHECKED BY MWW

SHEET TITLE
MECHANICAL DETAILS

M-501

SHEET ___ OF ___

7/20/2015 2:46:03 PM

PIPE INSULATION SCHEDULE - MECHANICAL

PIPING SYSTEM	INSULATION TYPE	JACKET TYPE	VAPOR BARRIER MASTIC	PIPE INSULATION THICKNESS (INCHES) FOR NOMINAL PIPE DIAMETERS (INCHES)			
				1/2" TO 1"	1 1/4" TO 2"	2 1/2" TO 4"	5" & UP
REFRIGERANT SUCTION	CELLULAR FOAM	ALL SERVICES	YES	1 1/2	1 1/2	-	-
REFRIGERANT SUPPLY	CELLULAR FOAM	ALL SERVICES	YES	1 1/2	1 1/2	-	-

DUCTWORK MATERIAL AND INSULATION SCHEDULE

DUCT SYSTEM	DUCT MATERIAL	DUCT INSULATION TYPE	DUCT INSULATION THICKNESS	REMARKS
EXHAUST	GALVANIZED STEEL	NONE	NONE	-
RETURN	GALVANIZED STEEL	DUCT LINER	1 1/2	-
SUPPLY - RECTANGULAR	GALVANIZED STEEL	DUCT WRAP	1 1/2	-
SUPPLY - RECTANGULAR - EXTERIOR	GALVANIZED STEEL	DUCT WRAP	2	-
SUPPLY - ROUND	GALVANIZED STEEL	DUCT WRAP	1 1/2	-
SUPPLY - RUNOUTS	FLEXIBLE DUCT	FLEXIBLE FIBER GLASS	1 1/2	-
TRANSFER AIR	GALVANIZED STEEL	DUCT LINER	1	-

GENERAL NOTES:

1. REFER TO SPECIFICATIONS FOR FURTHER DETAILS ON DUCT MATERIAL AND INSULATION.
2. ALL EXPOSED DUCTWORK SHALL HAVE 1 1/2" DUCT LINER AND NOT EXTERNALLY WRAPPED, TYPICAL.

AIR DEVICE SCHEDULE

MARK	MANUFACTURER/ MODEL #	SERVICE	FACE SIZE	TYPE	MATERIAL	REMARKS
A	KRUEGER / 51450	SUPPLY	24x24	CEILING	ALUMINUM	-
B	KRUEGER / EGC 5	RETURN/EXHAUST	24x24	CEILING	ALUMINUM	-
C	KRUEGER / EGC 5	RETURN/EXHAUST	12x12	CEILING	ALUMINUM	-
D	KRUEGER / DMD	SUPPLY	24x4	DUCT MOUNTED	ALUMINUM	A
E	KRUEGER / S580	RETURN	20x20	SIDEWALL	ALUMINUM	-

GENERAL NOTES:

1. SEE HVAC PLANS FOR LOCATIONS AND QUANTITIES OF EACH AIR DEVICE.
2. ALL AIR DEVICES SHALL BE TESTED IN ACCORDANCE WITH ASHRAE STANDARD 70-91.
3. ALL DIFFUSERS SHALL BE TESTED IN ACCORDANCE WITH AIR DIFFUSION COUNCIL (ADC) CODE 1062R4. SOUND DATA FOR DIFFUSERS SHALL BE CALCULATED IN ACCORDANCE WITH INTERNATIONAL STANDARD ISO 3741 FOR COMPARISON.
4. MAXIMUM NOISE CRITERIA (NC) SHALL BE 35 OR LESS UNLESS OTHERWISE NOTED.
5. ALL OPPOSED BLADE AND/OR EXTRACTOR DAMPERS SHALL BE INTEGRAL TO THE DIFFUSERS AND GRILLES.
6. CONTRACTOR SHALL VERIFY THE SURFACE TYPE AND SUBSTITUTE APPROPRIATE DIFFUSER/FRAME WHERE NECESSARY.
7. PLENUMS AND NECKS SHALL BE CONSTRUCTED OF ALUMINUM IN ROUND NECK SIZES. ALL DIFFUSERS SHALL BE INSTALLED WITH GALVANIZED STEEL ELBOWS AT CONNECTION TO DIFFUSER AND BRANCH DUCT BALANCING DAMPERS.
8. COORDINATE FINAL FINISH WITH ARCHITECT.
9. REGISTERS SHALL INCLUDE SQUARE TO ROUND ADAPTER ACCESSORIES FOR ROUND CONNECTIONS WHERE NECESSARY.

REMARK NOTES:

A. MOUNT DIFFUSER AT 45º FROM VERTICAL.

THERMOSTATS:

ROOFTOP UNITS (RTU)

(T) ELECTRIC THERMOSTAT AND SUBBASE - PROVIDE HEATING AND COOLING UNIT CONTROL AS REQUIRED BY EQUIPMENT MANUFACTURER. THERMOSTAT SHALL HAVE SYSTEM SELECTOR SWITCH (OFF-HEAT-AUTO-COOL) AND FAN CONTROL SWITCH (AUTO-ON). IF THE UNITS HAVE MULTIPLE HEATING/COOLING STAGES, AND/OR MULTIPLE FAN SPEEDS, THERMOSTAT SHALL HAVE THE CAPABILITY OF SELECTING THESE OPTIONS. THE SUBBASE SHALL PROVIDE SYSTEM AND FAN SWITCHING AT THE THERMOSTAT LOCATION. THERMOSTAT SHALL BE COMPATIBLE WITH A/C UNITS INCORPORATING OUTSIDE AIR ECONOMIZER. CONTRACTOR TO PROVIDE ZONE SENSOR AS NECESSARY.

ROOFTOP UNIT SCHEDULE (GROUND MOUNTED)

MARK	NO.	MANUFACTURER/ MODEL NO.	TYPE	SUPPLY FAN			COOLING CAPACITY				HEATING (MBH)		ELECTRICAL				REMARKS
							EAT (ºF)										
				CFM	ESP (IN.)	HP	DB	WB	TOTAL MBH	SENS MBH	INPUT	OUTPUT	VOLT	PHASE	MCA	MOCP	
RTU	1	DAIKIN / DCG036	HORIZONTAL	1,200	0.5	1.5	79.1	61.8	26.9	26.9	45.0	33.8	208	3	19.4	25	-
RTU	2	DAKIN / DCG048	HORIZONTAL	1,600	0.5	1.5	79.1	61.8	35.4	35.4	90.0	68.1	208	3	22.8	35	-
RTU	3	DAIKIN / DCG072	HORIZONTAL	2,400	0.5	2	79.1	61.8	55.7	55.7	140.0	101.6	208	3	33.4	50	-

GENERAL NOTES:

1. CAPACITY BASED ON 100ºF AMBIENT TEMPERATURE.
2. COOLING LOADS INCLUDE SUPPLY FAN MOTOR HEAT.
3. PROVIDE MANUFACTURER'S RECOMMENDED SERVICE CLEARANCE AROUND ENTIRE UNIT.
4. HEATING AND COOLING CAPACITIES AND FAN STATIC PRESSURES ARE AT JOBSITE ELEVATION OF 5,281 FT.
5. PROVIDE WITH HINGED ACCESS DOORS.
6. PROVIDE WITH MERV 8 FILTERS & COTTONWOOD FILTERS.
7. UNITS SHALL HAVE A FULL-SIZE DRY BULB TYPE ECONOMIZER AND BAROMETRIC RELIEF.
8. FURNISH STANDARD COIL WITH HAIL GUARDS.
9. ELECTRICAL TO PROVIDE NON-FUSED DISCONNECT SWITCH. REFER TO ELECTRICAL SHEETS.
10. PROVIDE WITH LPG CONVERSION KIT.

EXHAUST FAN SCHEDULE

MARK	NO.	MANUFACTURER/ MODEL NO.	LOCATION	TYPE	CFM	ESP (IN.)	DRIVE	SONES	RPM	ELECTRICAL					REMARKS
										HP	WATTS	VOLT	PHASE	FLA	
EF	1	GREENHECK / SQ-90-VG	RESTROOM	INLINE	380	0.2	DIRECT	6.5	1,725	0.04	-	115	1	3.4	A,B,C

GENERAL NOTES:

1. ELECTRICAL TO PROVIDE MOTOR SNAP SWITCH. REFER TO ELECTRICAL SHEETS.

REMARK NOTES:

A. INSTALL FAN PER MANUFACTURER'S REQUIREMENTS.
B. PROVIDE WITH BACKDRAFT DAMPER.
C. PROVIDE WITH PEST SCREEN.

CONDENSING UNIT SCHEDULE

MARK	NO.	MANUFACTURER / MODEL NO.	MATCHING INDOOR UNIT	TOTAL COOLING CAPACITY (MBH)	ELECTRICAL				REMARKS
					VOLT	PH	MCA	MOCP	
CU	1	DAIKIN / RK18NMVJU	AC-1	18.0	208	1	18.3	20.0	A,B,C

GENERAL NOTES:

1. CAPACITIES BASED ON OUTDOOR TEMPERATURES OF 100ºF SUMMER & 19ºF WINTER.
2. REFRIGERANT TYPE R-410A.
3. ELECTRICAL TO PROVIDE NON-FUSED DISCONNECT SWITCH. REFER TO ELECTRICAL SHEETS.

REMARK NOTES:

A. PROVIDE WITH LOW AMBIENT TEMPERATURE STARTUP KIT.
B. PROVIDE WITH HAIL GUARD.
C. INDOOR UNIT (AC-1) CONNECTS TO OUTDOOR UNIT (CU-1) WITH SINGLE POINT CONNECTION.

AIR CONDITIONING UNIT SCHEDULE (DUCTLESS SPLIT SYSTEM)

MARK	NO.	MANUFACTURER/ MODEL NO.	TYPE	SUPPLY (CFM)	TOTAL COOLING CAPACITY (MBH)	ELECTRICAL				REMARKS
						VOLT	PH	MCA	MOCP	
AC	1	DAIKIN / FTK18NMVJU	WALL MOUNT	500	18.0	208	1	18.3	20	A

GENERAL NOTES:

1. CAPACITIES BASED ON OUTDOOR TEMPERATURES OF 100ºF SUMMER & 19ºF WINTER.
2. PROVIDE MANUFACTURERS RECOMMENDED SERVICE CLEARANCE AROUND ENTIRE UNIT.
3. PROVIDE WITH CONDENSATE PUMP CAPABLE OF 18" OF LIFT.
4. PROVIDE CONDENSATE HIGH-LEVEL SHUT-OFF SWITCH.
5. ELECTRICAL TO PROVIDE NON-FUSED DISCONNET SWITCH. REFER TO ELECTRICAL SHEETS.

REMARKS NOTES:

1. INDOOR UNIT (AC-1) CONNECTS TO OUTDOOR UNIT (CU-1) WITH SINGLE POINT CONNECTION.

UNIT HEATER SCHEDULE (ELECTRIC)

MARK	NO.	MANUFACTURER / MODEL #	AREA SERVED	CFM	ELECTRICAL				REMARKS
					VOLT	PH	KW	AMPS	
UH	1	REZNOR / EGW 3	JANITOR CLOSET	300	208	1	2.25	10.82	-

GENERAL NOTES:

1. PROVIDE WITH UNIT MOUNTED THERMOSTAT.
2. ELECTRICAL TO PROVIDE NON-FUSED DISCONNECT SWITCH. REFER TO ELECTRICAL SHEETS.

LOUVER SCHEDULE

MARK	NO.	MANUFACTURER/ MODEL NO.	AREA SERVED	SIZE (W"xH")	P.D. (IN.)	MIN. FREE AREA	AIRFLOW (CFM)	DAMPER TYPE	REMARKS
L	1	RUSKIN / ELF6375DX	RESTROOM	18x18	0.1	0.93	380	N/A	-

GENERAL NOTES:

1. ARCHITECT TO SPECIFY COLOR.
2. CONTRACTOR SHALL VERIFY DEPTH OF LOUVER REQUIRED FOR PROPER ROUGH-IN.

WILSON & COMPANY
4900 LANG AVENUE NE
ALBUQUERQUE, NM 87109
PHONE: (505) 348-4000

CONSULTANTS

SEAL

MARK W. WENTZEL
NEW MEXICO
17012
REGISTERED PROFESSIONAL ENGINEER
7-15-2015

PROJECT NAME:
OTERO COUNTY
EMERGENCY OPERATIONS CENTER
ALAMOGORDO, NM

MARK	DATE	DESCRIPTION
-	07-15-15	PERMIT DOCUMENTS

PROJECT NO: 15-600-204-01
DRAWN BY KFD
CHECKED BY MWW

SHEET TITLE
MECHANICAL SCHEDULES

M-601

SHEET ___ OF ___

7/20/2015 2:46:06 PM

SYMBOL LEGEND - POWER PLANS

SYMBOL	DESCRIPTION
	RECEPTACLE, NEMA 5-20R SIMPLEX UNLESS OTHERWISE INDICATED, SEE PLANS FOR MOUNTING HEIGHT, COORDINATE EXACT LOCATION WITH ARCHITECTURAL PLANS
C	RECEPTACLE FOR CLOCK OUTLET, NEMA 5-20R SIMPLEX UNLESS OTHERWISE INDICATED MOUNT AT 72" AFF TO CENTER OF DEVICE, UNLESS OTHERWISE INDICATED, COORDINATE EXACT LOCATION WITH ARCHITECTURAL PLANS
	RECEPTACLE, NEMA 5-20A DUPLEX UNLESS OTHERWISE INDICATED, MOUNT AT 18" AFF, UNLESS OTHERWISE INDICATED, COORDINATE EXACT LOCATION WITH ARCHITECTURAL PLANS
A	RECEPTACLE, NEMA 5-20A DUPLEX UNLESS OTHERWISE INDICATED, MOUNT AT 4" ABOVE COUNTER-TOP TO CENTER OF DEVICE WHEN COUNTER HAS NO SPLASH BLOCK OR MOUNT AT 4" ABOVE SPLAH BLOCK CENTER OF DEVICE WHEN COUNTER HAS SPLASH BLOCK, COORDINATE EXACT LOCATION AND HEIGHT OF OUTLET WITH ARCHITECTURAL PLANS
	RECEPTACLE, WITH GFCI PROTECTION, NEMA 5-20R DUPLEX UNLESS OTHERWISE INDICATED
WP	RECEPTACLE, WITH GFCI PROTECTION, MOUNTED IN WEATHERPROOF-IN-USE HOUSING, NEMA 5-20R DUPLEX UNLESS OTHERWISE INDICATED
DF	RECEPTACLE, DRINKING FOUNTAIN, NEMA 5-20R DUPLEX UNLESS OTHERWISE INDICATED, CONCEAL OUTLET BEHIND DRINK FOUNTAIN, COORDINATED EXACT LOCATION AND MOUNTING HEIGHT WITH ARCHITECTURAL PLANS
S	RECEPTACLE, SWITCHED, NEMA 5-20R DUPLEX, UNLESS OTHERWISE INDICATED
C	RECEPTACLE, CEILING MOUNTED, NEMA 5-20A DUPLEX, UNLESS OTHERWISE INDICATED
	RECEPTACLE, EMERGENCY POWER, NEMA 5-20R DUPLEX, UNLESS OTHERWISE INDICATED
	RECEPTACLE, HOSPITAL GRADE, NEMA 5-20R DUPLEX, UNLESS OTHERWISE INDICATED
	RECEPTACLE, HOSPITAL GRADE, EMERGENCY POWER, NEMA 5-20R DUPLEX, UNLESS OTHERWISE INDICATED
C	RECEPTACLE, CEILING MOUNTED, NEMA 5-20R QUADRAPLEX, UNLESS OTHERWISE INDICATED
	RECEPTACLE, NEMA 5-20R QUADRAPLEX, UNLESS OTHERWISE INDICATED
	RECEPTACLE, EMERGENCY POWER, NEMA 5-20R QUADRAPLEX, UNLESS OTHERWISE INDICATED
Q	RECEPTACLE, HOSPITAL GRADE, NEMA 5-20R QUADRAPLEX, UNLESS OTHERWISE INDICATED
	RECEPTACLE, HOSPITAL GRADE, EMERGENCY POWER, NEMA 5-20R QUADRAPLEX, UNLESS OTHERWISE INDICATED
	RECEPTACLE, 250V/2P/4P FOR DRYER (NEMA TYPE 14-30R) OR RANGE (NEMA TYPE 14-5-R), SEE PLANS FOR RATING
	RECEPTACLE,SPECIAL PURPOSE, SEE PLANS FOR NEMA TYPE OR RATING
	RECEPTACLE,SPECIAL PURPOSE WITH EMERGENCY POWER SEE PLANS FOR NEMA TYPE OR RATING
	RECEPTACLE,FLOOR MOUNTING, NEMA 5-20R DUPLEX UNLESS OTHERWISE INDICATED
	RECEPTACLE,FLOOR MOUNTING, NEMA 5-20R QUADRAPLEX UNLESS OTHERWISE INDICATED
	MULTI-OUTLET RECEPTACLE STRIP, NEMA 5-20R DUPLEX UNLESS OTHERWISE INDICATED, SEE PLANS FOR OUTLET SPACING AND MOUNTING HEIGHT
M	MULTI-OUTLET STRIP, TYPE RJ-45 VOICE DATA OUTLETS, UNLESS OTHERWISE INDICATED AND RECEPTACLE, NEMA 5-20R DUPLEX, UNLESS OTHERWISE INDICATED, SEE PLANS FOR OUTLET SPACING AND MOUNTING HEIGHT
V	COMBINATION FLOOR-MOUNTED TYPE RJ-45 VOICE/DATA OUTLET, UNLESS OTHERWISE INDICATED AND RECEPTACLE, NEMA 5-20R DUPLEX, UNLESS OTHERWISE INDICATED
V	COMBINATION FLOOR-MOUNTED TYPE RJ-45 VOICE/DATA OUTLET, UNLESS OTHERWISE INDICATED AND RECEPTACLE, NEMA 5-20R QUADRAPLEX, UNLESS OTHERWISE INDICATED
J	JUNCTION BOX, FLUSH MOUNTED IN FINISHED SPACES OR OTHERWISE SURFACE MOUNTED, MINIMUM BOX VOLUME SHALL BE 21 CUBIC INCHES (344 CC)
J	JUNCTION BOX, FLOOR MOUNTED
H	HUMIDISTAT, MOUNT AT 46" AFF TO CENTER OF DEVICE, UNLESS OTHERWISE INDICATED
T	THERMOSTAT, MOUNT AT 46" AFF TO CENTER OF DEVICE, UNLESS OTHERWISE INDICATED
	PUSH BUTTON, MOUNT AT 46" TO CENTER OF DEVICE, UNLESS OTHERWISE INDICATED, SEE PLANS FOR FURTHER DETAILS
	RACEWAY STUB, INDICATE LOCATION AND DIMENSION ON RECORD DRAWINGS
	DISCONNECT SWITCH, FUSED, MOUNT AT MAXIMUM OF 66"AFF TO CENTER OF OPERABLE HANDLE OR ACCESSIBLE ABOVE FINISHED CEILING
	DISCONNECT SWITCH, NON-FUSED, MOUNT AT MAXIMUM OF 66"AFF TO CENTER OF OPERABLE HANDLE OR ACCESSIBLE ABOVE FINISHED CEILING
	COMBINATION MOTOR STARTER WITHOUT DISCONNECT SWITCH, MOUNT AT MAXIMUM OF 66" AFF TO TOP OF PANEL OR ACCESSIBLE ABOVE FINISHED CEILING
	COMBINATION MOTOR STARTER WITH DISCONNECT SWITCH, MOUNT AT MAXIMUM OF 66" AFF TO TOP OF PANEL OR ACCESSIBLE ABOVE FINISHED CEILING
5	MOTOR CONNECTION WITH HORSEPOWER (HP) INDICATED
002/2	CONDUCTOR AND RACEWAY (CR) SCHEDULE INDICATOR SEE ONE-LINE DIAGRAM
A- 1,3,5	HOME RUN WITH CIRCUIT NUMBERS, CONDUCTOR AND RACEWAY SCHEDULE TO BE CR# 002/2UNLESS OTHERWISE INDICATED, SEE ONE-LINE DIAGRAM FOR CR SCHEDULE
	CABLE TRAY OR LADDER RACK, POWER OR SPECIAL SYSTEMS, SEE PLANS FOR DETAILS
	CABINET OR ENCLOSURE WITH HINGED DOOR AND KEYED LOCK FOR SPECIAL SYSTEMS, MOUNT AT MAXIMUM OR 66" AFF TO TOP OF PANEL
LP	LIGHTING CONTROL OR DIMMING PANEL, SEE PANEL SCHEDULES FOR DETAILS, MOUNT AT MAXIMUM OF 66" AFF TO TOP OF PANEL
PDP--	PANELBOARD OR DISTRIBUTION BOARD, SURFACE MOUNTED, MOUNT AT MAXIMUM OF 66" AFF TO CENTER OF HIGHEST OPERABLE HANDLE
	PANELBOARD, FLUSH MOUNTED, MOUNT AT MAXIMUM OF 6" AFF TO CENTER OF HIGHEST OPERABLE HANDLE
	DISTRIBUTION BOARD OR SWITCHBOARD, FREE-STANDING, FLOOR MOUNTED
M	METER IN CABINET OR PANEL FOR ELECTRICAL UTILITY, SEE ONE-LINE DIAGRAM, MOUNT AT MAXIMUM OF 66" AFF TO TOP OF ENCLOSURE, MOUNT WITHIN 48" MEASURED HORIZONTALLY TO MAIN SERVICE DISCONNECT SWITCH EXCEPT WITH UNDERGROUND RACEWAYS BETWEEN THEM
	GROUND OR EARTH CONNECTION, SEE ONE-LINE DIAGRAM
PB	PULL BOX, SEE PLANS FOR SIZE AND TYPE
T	TRANSFORMER, SEE SITE PLANS OR TRANSFORMER SCHEDULES FOR SIZE AND TYPE
	TRANSFORMER, SEE ONE-LINE DIAGRAMS OR TRANSFORMER SCHEDULES FOR SIZE AND TYPE
—T—	TELEPHONE RACEWAY, SEE PLANS FOR SIZE AND OTHER DETAILS
—C—	COMPUTER DATA RACEWAY, SEE PLANS FOR SIZE AND OTHER DETAILS
—TV—	TELEVISION RACEWAY, SEE PLANS FOR SIZE AND OTHER DETAILS
—CCTV—	CLOSED CIRCUIT TELEVISION RACEWAY, SEE PLANS FOR SIZE AND OTHER DETAILS
—S—	SOUND SYSTEM RACEWAY, SEE PLANS FOR SIZE AND OTHER DETAILS
—I—	INTERCOM OR PAGING RACEWAY, SEE PLANS FOR SIZE AND OTHER DETAILS
—NC—	NURSE CALL RACEWAY, SEE PLANS FOR SIZE AND OTHER DETAILS

SYMBOL LEGEND-SPECIAL SYSTEMS

SYMBOL	DESCRIPTION
X	DATA OUTLET, WHERE X INDICATES NUMBER OF CABLES OR OUTLETS REQUIRED IF MORE THAN ONE (1), MOUNT AT 18" AFF TO CENTER OF DEVICE, UNLESS OTHERWISE INDICATED PROVIDE 3/4" CONDUIT STUBBED ABOVE NEAREST ACCESSIBLE CEILING WITH PLASTIC BUSHINGS AT EACH END MEASURED PULL STRING, SUBSTITUTE 1"CONDUIT WHEN MORE THAN 3 CABLES OR 1.25" CONDUIT WHEN MORE THAN 6 CABLES ARE INDICATED, PROVIDE OUTLET BOX APPROPRIATE FOR CONDUIT SIZE. WHEN CABLING IS INSTALLED CONTRACTOR SHALL PROVIDE CATEGORY 5E PLENUM-RATED CABLING, UNLESS OTHERWISE INDICATED
X	TELEPHONE OUTLET, WHERE X INDICATES NUMBER OF CABLES OR OUTLETS REQUIRED IF MORE THAN ONE (1), MOUNT AT 18" AFF TO CENTER OF DEVICE, UNLESS OTHERWISE INDICATED, PROVIDE 3/4" CONDUIT STUBBED ABOVE NEAREST ACCESSIBLE CEILING WITH PLASTIC BUSHINGS AT EACH END MEASURED PULL STRING, SUBSTITUTE 1"CONDUIT WHEN MORE THAN 3 CABLES OR 1.25" CONDUIT WHEN MORE THAN 6 CABLES ARE INDICATED, PROVIDE OUTLET BOX APPROPRIATE FOR CONDUIT SIZE, WHEN CABLING IS INSTALLED CONTRACTOR SHALL PROVIDE CATEGORY 5E PLENUM-RATED CABLING, UNLESS OTHERWISE INDICATED
X	TELEPHONE/DATA OUTLET, WHERE X INDICATES NUMBER OF CABLES OR OUTLETS REQUIRED IF MORE THAN ONE (1), MOUNT AT 18" AFF TO CENTER OF DEVICE, UNLESS OTHERWISE INDICATED, PROVIDE 3/4" CONDUIT STUBBED ABOVE NEAREST ACCESSIBLE CEILING WITH PLASTIC BUSHINGS AT EACH END MEASURED PULL STRING, SUBSTITUTE 1"CONDUIT WHEN MORE THAN 3 CABLES OR 1.25" CONDUIT WHEN MORE THAN 6 CABLES ARE INDICATED, PROVIDE OUTLET BOX APPROPRIATE FOR CONDUIT SIZE, WHEN CABLING IS INSTALLED CONTRACTOR SHALL PROVIDE CATEGORY 5E PLENUM-RATED CABLING, UNLESS OTHERWISE INDICATED
W	WALL TELEPHONE OUTLET, MOUNT AT 46" AFF TO CENTER OF DEVICE, UNLESS OTHERWISE INDICATED, PROVIDE 3/4" CONDUIT STUBBED ABOVE NEAREST ACCESSIBLE CEILING WITH PLASTIC BUSHINGS AT EACH END AND MEASURED PULL STRING, WHEN CABLING IS INSTALLED CONTRACTOR SHALL PROVIDE CATEGORY 5E PLENUM-RATED CABLING, UNLESS OTHERWISE INDICATED
FF	WALL TELEPHONE OUTLET, FIREMAN'S TELEPHONE, MOUNT AT 46" AFF TO CENTER OF DEVICE, UNLESS OTHERWISE INDICATED, PROVIDE 3/4" CONDUIT STUBBED ABOVE NEAREST ACCESSIBLE CEILING WITH PLASTIC BUSHINGS AT EACH END AND MEASURED PULL STRING, WHEN CABLING IS INSTALLED CONTRACTOR SHALL PROVIDE CATEGORY 5E PLENUM-RATED CABLING, UNLESS OTHERWISE INDICATED
X	DATA OUTLET, FLOOR MOUNTED, WHERE X INDICATES NUMBER OF CABLES OR OUTLETS REQUIRED IF MORE THAN ONE (1), PROVIDE 1" CONDUIT STUBBED ABOVE NEAREST ACCESSIBLE CEILING WITH PLASTIC BUSHINGS AT EACH END AND MEASURED PULL STRING, SUBSTITUTE 1.25" CONDUIT WHEN MORE THAN 3 CABLES OR 1.5" CONDUIT WHEN MORE THAN 6 CABLES ARE INDICATED, WHEN CABLING IS INSTALLED CONTRACTOR SHALL PROVIDE CATEGORY 5E PLENUM-RATED CABLING, UNLESS OTHERWISE INDICATED
X	TELEPHONE OUTLET, FLOOR MOUNTED, WHERE X INDICATES NUMBER OF CABLES OR OUTLETS REQUIRED IF MORE THAN ONE (1), PROVIDE 1" CONDUIT STUBBED ABOVE NEAREST ACCESSIBLE CEILING WITH PLASTIC BUSHINGS AT EACH END AND MEASURED PULL STRING, SUBSTITUTE 1.25" CONDUIT WHEN MORE THAN 3 CABLES OR 1.5" CONDUIT WHEN MORE THAN 6 CABLES ARE INDICATED, WHEN CABLING IS INSTALLED CONTRACTOR SHALL PROVIDE CATEGORY 5E PLENUM-RATED CABLING, UNLESS OTHERWISE INDICATED
X	TELEPHONE/DATA OUTLET, FLOOR MOUNTED, WHERE X INDICATES NUMBER OF CABLES OR OUTLETS REQUIRED IF MORE THAN ONE (1), PROVIDE 1" CONDUIT STUBBED ABOVE NEAREST ACCESSIBLE CEILING WITH PLASTIC BUSHINGS AT EACH END AND MEASURED PULL STRING, SUBSTITUTE 1.25" CONDUIT WHEN MORE THAN 3 CABLES OR 1.5" CONDUIT WHEN MORE THAN 6 CABLES ARE INDICATED, WHEN CABLING IS INSTALLED CONTRACTOR SHALL PROVIDE CATEGORY 5E PLENUM-RATED CABLING, UNLESS OTHERWISE INDICATED
	WIRELESS ACCESS DATA POINT OR CEILING MOUNTED DATA OUTLET, WHERE X INDICATES NUMBER OF CABLES OR OUTLETS REQUIRED IF MORE THAN ONE (1), WHEN CABLING IS INSTALLED CONTRACTOR SHALL PROVIDE CATEGORY 5E PLENUM-RATED CABLING, UNLESS OTHERWISE INDICATED
	TELEPHONE TERMINAL BOARD (TB), PROVIDE 3/4" THICK PLYWOOD, FIRE TREATED AND PAINTED ON BOTH SIDES, MOUNT ON WALL, AS SHOWN ON PLANS, PROVIDE 3" WIDE x 6" LONG x 1/4" THICK COPPER GROUNDING BUSBAR WITH 6 AWG GROUNDING CONDUCTOR CONNECTED TO THE NEAREST BUILDING STEEL, PLYWOOD SHALL BE 4' x 4' UNLESS OTHERWISE INDICATED ON PLANS, SEE VOICE/DATA RISER DETAIL ON PLANS FOR FURTHER INFORMATION
TV	TELEVISION OUTLET, WALL MOUNTED, MOUNT AT 72" AFF TO CENTER OF DEVICE, UNLESS OTHERWISE INDICATED, PROVIDE 3/4" CONDUIT STUBBED ABOVE NEAREST ACCESSIBLE CEILING WITH PLASTIC BUSHINGS AT EACH END AND MEASURED PULL STRING, WHEN CABLING IS INSTALLED CONTRACTOR SHALL PROVIDE RG-6 CABLING, UNLESS OTHERWISE INDICATED
P	FIRE ALARM PULL STATION , MOUNT AT 46" AFF TO CENTER OF DEVICE, UNLESS OTHERWISE INDICATED, PROVIDE 2-GANG BOX WITH 1-GANG PLASTER RING
H	FIRE ALARM HORN/STROBE, MOUNT AT 84" AFF TO CENTER OF DEVICE, UNLESS OTHERWISE INDICATED, PROVIDE 2-GANG BOX WITH 1-GANG PLASTER RING
	FIRE ALARM HORN/STROBE, MOUNT AT 90" AFF TO CENTER OF DEVICE BUT NO HIGHER THAN 6" BFC TO CENTER OF DEVICE, UNLESS OTHERWISE INDICATED, PROVIDE 2-GANG BOX WITH 1-GANG PLASTER RING
F	FIRE ALARM STROBE, MOUNT AT 84" AFF TO CENTER OF DEVICE, UNLESS OTHERWISE INDICATED, PROVIDE 2-GANG BOX WITH 1-GANG PLASTER RING
F C	FIRE ALARM HORN/STROBE WITH CHIME, MOUNT AT 84" AFF TO CENTER OF DEVICE, UNLESS OTHERWISE INDICATED, PROVIDE 2-GANG BOX WITH 1-GANG PLASTER RING
F C	FIRE ALARM HORN WITH CHIME, MOUNT AT 90" AFF TO CENTER OF DEVICE BUT NO HIGHER THAN 6" BFC TO CENTER OF DEVICE, UNLESS OTHERWISE INDICATED, PROVIDE 2-GANG BOX WITH 1-GANG PLASTER RING
FS	FIRE ALARM FLOW SWITCH, MOUNT AT FIRE SPRINKLER RISER
TS	FIRE ALARM TAMPER SWITCH, MOUNT AT FIRE SPRINKLER RISER
MM	FIRE ALARM MONITOR MODULE
CM	FIRE ALARM CONTROL MODULE
	MAGNETIC HOLD-OPEN FOR DOOR, PROVIDE CONTROL MODULE FOR RELEASE BY FIRE ALARM SYSTEM, MAY ALSO REQUIRE 120V AC POWER
	SECURITY ACCESS BUZZER
	SECURITY ACCESS BELL
	SECURITY ACCESS BUZZER AND BELL COMBINATION
P	PUSH BUTTON PANIC, MOUNT BENEATH WORKSTATION DESK TOP, COORDINATE EXACT LOCATION WITH ARCHITECTURAL PLANS, SEE PLANS FOR FURTHER DETAILS
S X	SPEAKER, X INDICATES SIZE, CEILING MOUNTED, EXTEND 1/2" CONDUIT BETWEEN SPEAKERS, COORDINATE EXACT LOCATION OF SPEAKER WITH ARCHITECTURAL PLANS
S X	SPEAKER, X INDICATES SIZE, MOUNT AT 84" AFF OR 12" BFC WHICHEVER IS HIGHER, EXTEND 1/2" CONDUIT BETWEEN SPEAKERS, COORDINATE EXACT LOCATION OF SPEAKER WITH ARCHITECTURAL PLANS
IR	INFRARED MOTION DETECTOR, PASSIVE CEILING MOUNTED, COORDINATE EXACT LOCATION WITH ARCHITECTURAL PLANS
IR W	INFRARED MOTION DETECTOR, PASSIVE WALL MOUNTED, MOUNT AT 24" AFF, UNLESS OTHERWISE INDICATED, COORDINATE EXACT LOCATION WITH ARCHITECTURAL PLANS
H R/T	DETECTOR, HEAT, COMBINATION, PROVIDE 4" SQUARE BOX FOR MOUNTING
H R/C	DETECTOR, HEAT, RATE COMPENSATION, PROVIDE 4" SQUARE BOX FOR MOUNTING
H F	DETECTOR, HEAT, FIXED TEMPERATURE, PROVIDE 4" SQUARE BOX FOR MOUNTING
H R	DETECTOR, HEAT, RATE IF RISE, PROVIDE 4" SQUARE BOX FOR MOUNTING
	DETECTOR, SMOKE, PROVIDE 4" SQUARE BOX FOR MOUNTING
H	DETECTOR, HEAT AND SMOKE, PROVIDE 4" SQUARE BOX FOR MOUNTING
I	DETECTOR, IONIZATION SMOKE, PROVIDE 4" SQUARE BOX FOR MOUNTING
IH	DETECTOR, IONIZATION AND HEAT SMOKE, PROVIDE 4" SQUARE BOX FOR MOUNTING
IHP	DETECTOR, IONIZATION, PHOTOELECTRIC AND HEAT SMOKE, PROVIDE 4" SQUARE BOX FOR MOUNTING
P	DETECTOR, PHOTO ELECTRIC HEAT SMOKE, PROVIDE 4" SQUARE BOX FOR MOUNTING
	SECURITY ACCESS AND CONTROL VIDEO CAMERA AND LENS, MOUNT AS SHOWN ON PLANS
M PTZ	SECURITY ACCESS AND CONTROL CAMERA AND LENS WITH PTZ, MOUNT AS SHOWN ON PLANS
CU	SECURITY ACCESS AND CONTROL CARD READER, MOUNT AT 46" AFF TO CENTER OF DEVICE, UNLESS OTHERWISE INDICATED, COORDINATE EXACT LOCATION WITH ARCHITECTURAL PLANS, PROVIDE 2-GANG BOX WITH 1-GANG PLASTER RING
CI	SECURITY ACCESS AND CONTROL DOOR CONTACT OR CONTACT INDICATOR, MOUNT IN DOOR FRAME
CR	SECURITY ACCESS AND CONTROL KEY PAD READER COMBINATION, MOUNT AT 46" AFF TO CENTER OF DEVICE, UNLESS OTHERWISE INDICATED, COORDINATE EXACT LOCATION WITH ARCHITECTURAL PLANS, PROVIDE 2-GANG BOX WITH 1-GANG PLASTER RING
	SECURITY ACCESS AND CONTROL, MHO, MOUNT ON WALL BEHIND DOOR LEAF, PROVIDE 2-GANG BOX WITH 1-GANG PLASTER RING, COORDINATE EXACT LOCATION WITH ARCHITECTURAL PLANS
S	SECURITY ACCESS AND CONTROL, RTE PUSH BUTTON OR REMOTE DOOR RELEASE, MOUNT AT 46" AFF TO CENTER OF DEVICE, UNLESS OTHERWISE INDICATED, PROVIDE 2-GANG BOX WITH 1-GANG PLASTER RING, COORDINATE EXACT LOCATION WITH ARCHITECTURAL PLANS
	NURSE CALL CORRIDOR DOME LIGHT, MOUNT IN CEILING, PROVIDE 2-GANG , DEEP BOX WITH 1-GANG PLASTER RING, COORDINATE EXACT LOCATION WITH ARCHITECTURAL PLANS
B	NURSE CALL BATHROOM PULL CORD STATION, MOUNT AT 46" AFF TO CENTER OF DEVICE EXCEPT IN PATIENT SHOWER MOUNT AT 72" TO CENTER OF DEVICE AND ON ADJACENT WALL TO SHOWER HEAD, UNLESS OTHERWISE INDICATED, PROVIDE 2-GANG, DEEP BOX WITH 1-GANG PLASTER RING, COORDINATE EXACT LOCATION WITH ARCHITECTURAL PLANS
D	NURSE CALL DUTY STATION, MOUNT AT 46" AFF TO CENTER OF DEVICE, UNLESS OTHERWISE INDICATED, PROVIDE 3-GANG, DEEP BOX WITH 3-GANG PLASTER RING, COORDINATE EXACT LOCATION WITH ARCHITECTURAL PLANS
E	NURSE CALL EMERGENCY ASSISTANCE CALL STATION, MOUNT AT 46" AFF TO CENTER OF DEVICE, UNLESS OTHERWISE INDICATED, PROVIDE 2-GANG, DEEP BOX WITH 1-GANG PLASTER RING, COORDINATE EXACT LOCATION WITH ARCHITECTURAL PLANS
C	NURSE CALL EMERGENCY ASSISTANCE CODE BLUE CALL STATION, MOUNT AT 46" AFF TO CENTER OF DEVICE, UNLESS OTHERWISE INDICATED, PROVIDE 2-GANG BOX, DEEP BOX WITH 1-GANH PLASTER RING, COORDINATE EXACT LOCATION WITH ARCHITECTURAL PLANS
J	NURSE CALL PATIENT BED STATION J-BOX FOR PILLOW SPEAKER, MOUNT AT 24" AFF TO CENTER OF DEVICE, UNLESS OTHERWISE INDICATED, PROVIDE 3-GANG, DEEP BOX WITH 1-GANG PLASTER RING, COORDINATE EXACT LOCATION WITH ARCHITECTURAL PLANS
P	NURSE CALL PATIENT STATION, MOUNT AT 46" AFF TO CENTER OF DEVICE, UNLESS OTHERWISE INDICATED, PROVIDE 2-GANG, DEEP BOX WITH 1-GANG PLASTER RING, COORDINATE EXACT LOCATION WITH ARCHITECTURAL PLANS
S	NURSE CALL STAFF STATION, MOUNT AT 46" AFF TO CENTER OF DEVICE, UNLESS OTHERWISE INDICATED, PROVIDE 3-GANG, DEEP BOX WITH 1-GANG PLASTER RING, COORDINATE EXACT LOCATION WITH ARCHITECTURAL PLANS
NCM	NURSE CALL MASTER STATION, PROVIDE 2-GANG BOX WITH 1-GANG PLASTER RING, COORDINATE EXACT LOCATION WITH ARCHITECTURAL PLANS
	PROJECTOR, COORDINATE EXACT LOCATION WITH ARCHITECTURAL PLANS
M	MICROPHONE INPUT, COORDINATE EXACT LOCATION WITH ARCHITECTURAL PLANS, PROVIDE 1-GANG BOX
S	SPEAKER SWITCH, COORDINATE EXACT LOCATION WITH ARCHITECTURAL PLANS, PROVIDE 1-GANG BOX
V	VOLUME CONTROL, COORDINATE EXACT LOCATION WITH ARCHITECTURAL PLANS, PROVIDE 1-GANG BOX
FACP	FIRE ALARM CONTROL PANEL
FAAP	FIRE ALARM ANNUNCIATOR PANEL
AP	SECURITY ACCESS CONTROL PANEL
AV	AUDIO VISUAL SYSTEM CONTROL PANEL

SYMBOL LEGEND-LIGHTING PLANS

SYMBOL	DESCRIPTION
	MONO-POINT FLUSH MOUNTED OR RECESSED LUMINAIRE (DOWNLIGHT), SEE FIXTURE SCHEDULE FOR DETAILS
	MONO-POINT SURFACE OR WALL MOUNTED LUMINAIRE (DOWNLIGHT), SEE FIXTURE SCHEDULE FOR DETAILS
	1' WIDE RECESSED OR FLUSH MOUNTED LUMINAIRE, SEE FIXTURE SCHEDULE FOR DETAILS
	1' WIDE SURFACE OR WALL MOUNTED SCONCE LUMINAIRE, SEE FIXTURE SCHEDULE FOR DETAILS
	2' x 2' SURFACE OR RECESSED LUMINAIRE, SEE FIXTURE SCHEDULE FOR DETAILS
	2' x 4' SURFACE OR RECESSED LUMINAIRE, SEE FIXTURE SCHEDULE FOR DETAILS
	WALL PACK LUMINAIRE, SEE FIXTURE SCHEDULE FOR DETAILS
	POLE MOUNTED LUMINAIRE, SEE FIXTURE SCHEDULE FOR DETAILS, LUMINAIRE AND POLE
	MONO-POINT SURFACE OR RECESSED EMERGENCY LUMINAIRE (DOWNLIGHT), SEE FIXTURE SCHEDULE FOR DETAILS
	1' WIDE RECESSED OF FLUSH MOUNTED EMERGENCY LUMINAIRE, SEE FIXTURE SCHEDULE FOR DETAILS
	1' WIDE SURFACE OR WALL MOUNTED EMERGENCY LUMINAIRE, SEE FIXTURE SCHEDULE FOR DETAILS
	2' x 2' SURFACE OR RECESSED EMERGENCY LUMINAIRE, SEE FIXTURE SCHEDULE FOR DETAILS
	2' x 4' SURFACE OR RECESSED EMERGENCY LUMINAIRE, SEE FIXTURE SCHEDULE FOR DETAILS
	TRACK LIGHTING
	EMERGENCY LIGHT WITH DUAL HEADS AND BATTERY, SURFACE OR FLUSH MOUNTED, SEE FIXTURE SCHEDULE FOR DETAILS, MOUNT AT 84" AFF TO CENTER UNLESS OTHERWISE INDICATED
	EXIT LIGHT, CEILING OR WALL MOUNTED, ARROWS INDICATE DIRECTIONAL ARROW ON LUMINAIRE AND SHADED AREAS INDICATE FACE OF EXIT LIGHT, SEE FIXTURE SCHEDULE FOR DETAILS
	COMBINATION EXIT AND EMERGENCY LIGHT, CEILING OR WALL MOUNTED, ARROWS INDICATE DIRECTIONAL ARROW ON LUMINAIRE AND SHADED AREAS INDICATE FACE OF EXIT LIGHT, SEE FIXTURE SCHEDULE FOR DETAILS
	JUNCTION BOX ABOVE FINISHED CEILING WITH FLEXIBLE RACEWAY WHIPS TO LUMINARIES
$	SWITCH, SINGLE POLE, MOUNT AT 46" AFF TO CENTER OF DEVICE UNLESS OTHERWISE INDICATED
$2	SWITCH, DOUBLE POLE, MOUNT AT 46" AFF TO CENTER OF DEVICE UNLESS OTHERWISE INDICATED
$3	SWITCH, 3-WAY, MOUNT AT 46" AFF TO CENTER OF DEVICE UNLESS OTHERWISE INDICATED
$4	SWITCH, 4-WAY, MOUNT AT 46" AFF TO CENTER OF DEVICE UNLESS OTHERWISE INDICATED
$C	SWITCH, TIMER OPERATED, MOUNT AT 46" AFF TO CENTER OF DEVICE UNLESS OTHERWISE INDICATED
$D	SWITCH, SINGLE POLE DIMMER, MOUNT AT 46" AFF TO CENTER OF DEVICE UNLESS OTHERWISE INDICATED
$3D	SWITCH, 3-WAY DIMMER, MOUNT AT 46" AFF TO CENTER OF DEVICE UNLESS OTHERWISE INDICATED
$K	SWITCH, KEY OPERATED, MOUNT AT 46" AFF TO CENTER OF DEVICE UNLESS OTHERWISE INDICATED
$M	SWITCH, SINGLE POLE MOMENTARY CONTACT, 3 POSITIONS, MOUNT AT 46" AFF TO CENTER OF DEVICE UNLESS OTHERWISE INDICATED
$OS	SWITCH, OCCUPANCY SENSOR, MOUNT AT 46" AFF TO CENTER OF DEVICE UNLESS OTHERWISE INDICATED
$P	SWITCH, PILOT LIGHT, MOUNT AT 46" AFF TO CENTER OF DEVICE UNLESS OTHERWISE INDICATED
$T	SWITCH, THERMAL (MOTOR), MOUNT AT 46" AFF TO CENTER OF DEVICE UNLESS OTHERWISE INDICATED
OS	OCCUPANCY SENSOR, CEILING MOUNTED, ARROW INDICATES APPROXIMATE AIMING DIRECTION, COORDINATE LOCATION WITH ARCHITECTURAL PLANS AND OTHER TRADES
OS W	OCCUPANCY SENSOR, WALL MOUNTED, MOUNT AT 6" BFC TO CENTER OF DEVICE, ARROW INDICATES APPROXIMATE AIMING DIRECTION, COORDINATE LOCATION WITH ARCHITECTURAL PLANS AND OTHER TRADES
PC	PHOTOCELL, MOUNT FACING THE NORTH WHERE POSSIBLE, SEE DETAIL PLANS FOR WIRING
TC	TIME CLOCK, MOUNT AT MAXIMUM OF 66" AFF TO TOP OF ENCLOSURE, SEE DETAIL PLANS FOR WIRING

ABBREVIATIONS AND DEFINITIONS

TERM	DESCRIPTION	TERM	DESCRIPTION
A	AMPERES OR AMPS (ALSO I)	MAX	MAXIMUM
ABBR	ABBREVIATION	MCA	MINIMUM CIRCUIT AMPS
ADA	AMERICANS WITH DISABILITY ACT	MCB	MAIN CIRCUIT BREAKER
AFF	ABOVE FINISHED FLOOR	MCP	MOTOR CIRCUIT PROTECTION
AFG	ABOVE FINISHED GRADE	MEP	MECHANICAL ELECTRICAL PLUMBING
AHJ	AUTHORITY HAVING JURISDICTION	MH	MAN OR MAINTENANCE HOLE
ALT	ALTERNATE	MHO	MAGNETIC HOLD OPEN
ANSI	AMERICAN NATIONAL STANDARDS INSTITUTE	MIN	MINIMUM
		MLO	MAIN LUGS ONLY
ATS	AUTOMATIC TRANSFER SWITCH	MOCP	MAXIMUM OVER-CURRENT PROTECTION
AWG	AMERICAN WIRE GAUGE		
BD	BOARD	MTS	MANUAL TRANSFER SWITCH
BDF	BUILDING DISTRIBUTION FRAME	NEC	NATIONAL ELECTRICAL CODE
BFC	BELOW FINISHED GRADE	NECA	NATIONAL ELECTRICAL CONTRACTORS ASSOCIATION
BLDG	BUILDING		
CAT	CATEGORY	NEMA	NATIONAL ELECTRICAL MANUFACTURERS ASSOCIATION
CATV	COMMUNITY ANTENNA TELEVISION (CABLE TELEVISION)		
		NESC	NATIONAL ELECTRICAL SAFETY CODE
CCTV	CLOSED CIRCUIT TELEVISION	NFC	NATIONAL FIRE CODE
CFCI	CONTRACTOR FURNISHED, CONTRACTOR INSTALLED	NFPA	NATIONAL FIRE PREVENTION ASSOCIATION
CFOI	CONTRACTOR FURNISH, OWNER INSTALLED	NIC	NOT IN CONTRACT
CMU	CONCRETE MASONRY UNIT	NRTL	NATIONALLY RECOGNIZED TESTING LABORATORY
CO	CONVENIENCE OUTLET (RECEPTACLE)	NTS	NOT TO SCALE
		OC	ON CENTER
CONT	CONTINUOUS	OCPD	OVER-CURRENT PROTECTIVE DEVICE
CT	CURRENT TRANSFORMER	OFCI	OWNER FURNISHED, CONTRACTOR INSTALLED
CTR	COUNTER		
DEMO	DEMOLITION	OFOI	OWNER FURNISHED, OWNER INSTALLED
DET	DETAIL		
DIV	DIVISION	OSHA	OCCUPATIONAL SAFETY AND HEALTH ADMINISTRATION
DIM	DIMENSION		
DPDT	DOUBLE-POLE, DOUBLE THROW	PB	PULL BOX
DPST	DOUBLE-POLE, SINGLE THROW	PBX	PRIVATE BRANCH EXCHANGE (PHONE SWITCH)
DWG	DRAWING		
ELEC	ELECTRICAL	POE	POWER OVER ETHERNET
EMI	ELECTROMAGNETIC INTERFERENCE	PROVIDE	FURNISH, INSTALL AND CONNECT READY FUNCTIONAL USE BY OWNER
EMT	ELECTRICAL METALLIC TUBING		
ENCL	ENCLOSURE	PSMH	PULSE-START MEAL HALIDE
ENT	ELECTRICAL NON-METALLIC TUBING	PT	POTENTIAL TRANSFER
EPO	EMERGENCY POWER OFF	PTZ	PAN, TILT AND ZOOM VI

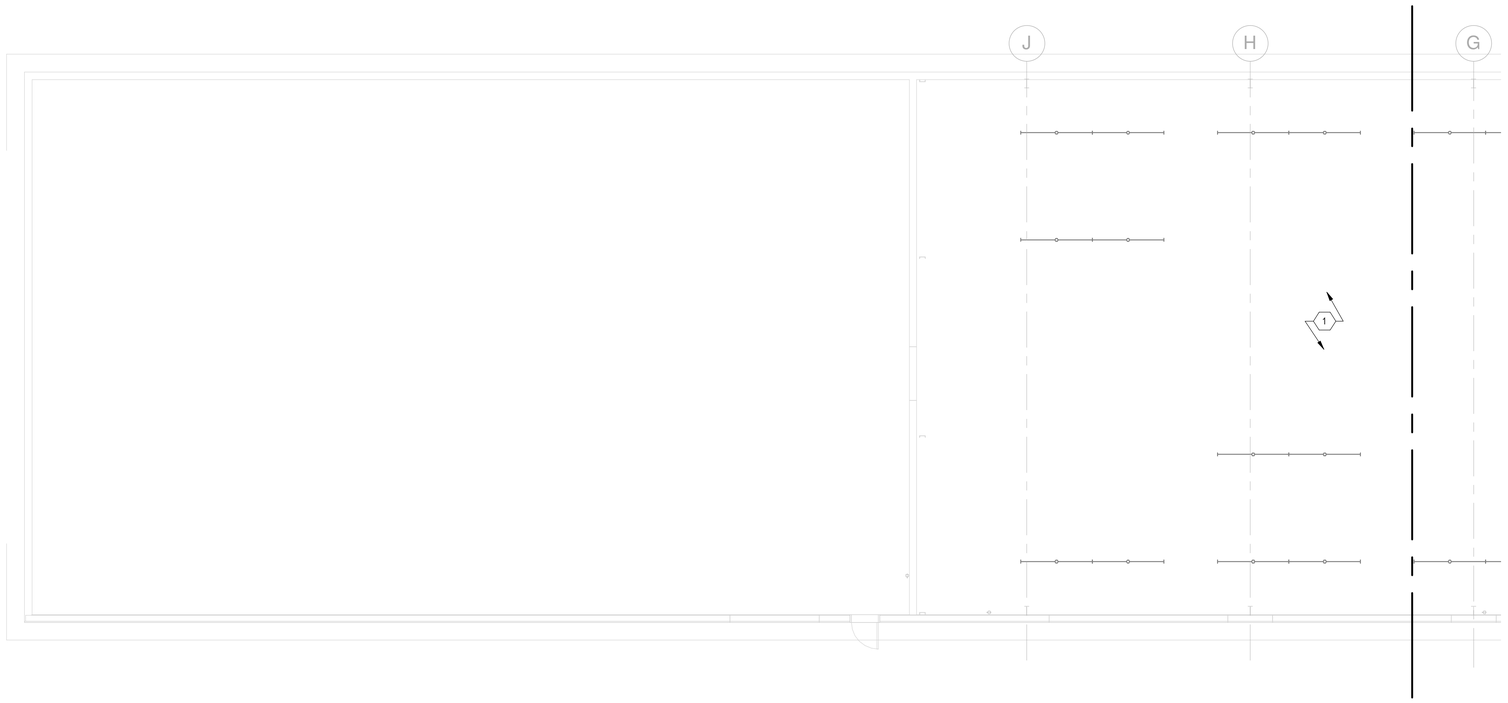

E1 ELECTRICAL LIGHTING PLAN - NORTH

1/8" = 1'-0"

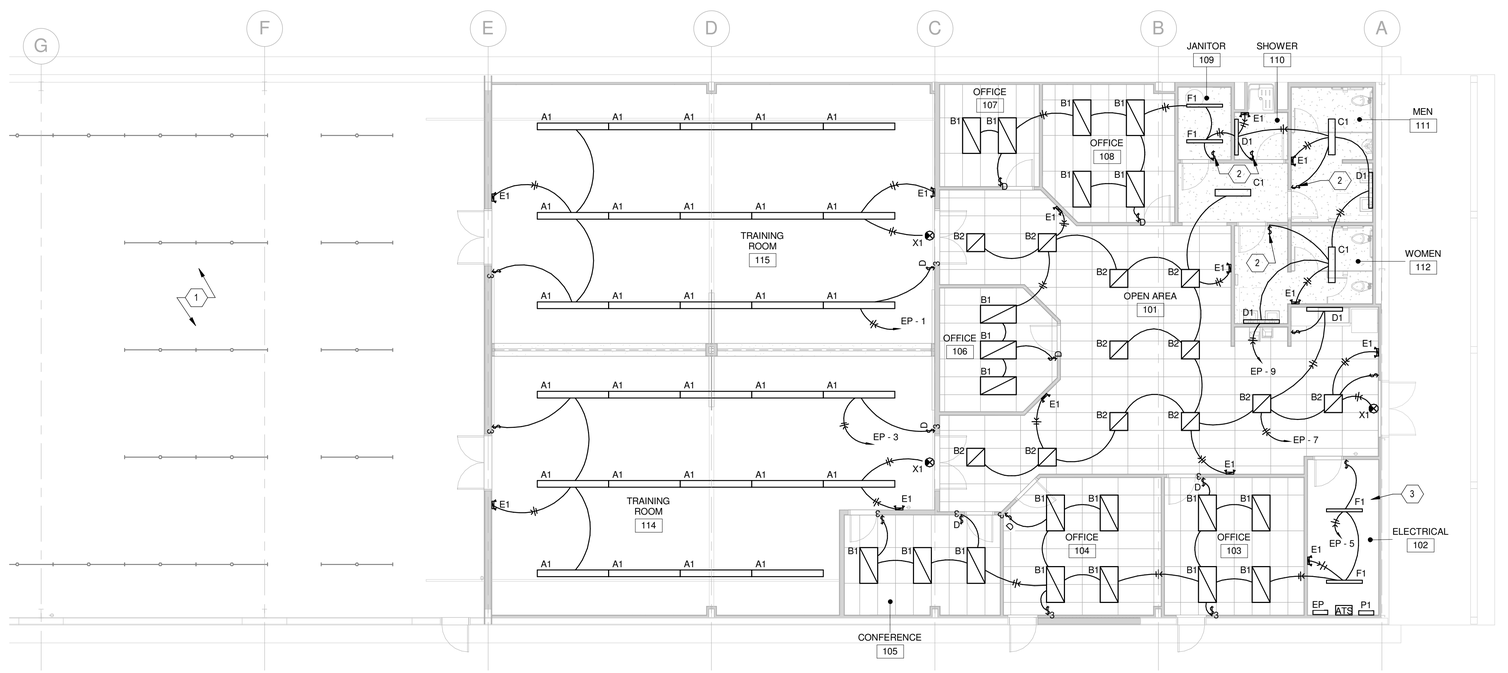

A1 ELECTRICAL LIGHTING PLAN - SOUTH

1/8" = 1'-0"

GENERAL SHEET NOTES

1. ALL WIRES ARE #12 AWG MINIMUM, UNLESS NOTED OTHEWISE.
2. SEE SHEET E-601 FOR LIGHTING FIXTURE SCHEDULE.
3. SEE SHEET E-601 FOR ELECTRICAL PANEL SCHEDULE.
4. RACEWAYS AND JUNCTION BOXES IN FACILITY ARE NOT IN COMPLIANCE WITH NEC CONTRACTOR TO SUPPORT ALL RACEWAYS AND JUNCTION BOXES IN FACILITY TO NEC CODE STANDARDS.
5. EMERGENCY LIGHTS AND EXIT SIGNS SHALL BE SUPPLIED WITH A CONSTANT HOT CONDUCTOR FROM THE ROOM OR CORRIDOR IN WHICH THEY ARE INSTALLED AND FROM NO OTHER CIRCUIT.
6. ALL DIMMER SWITCHES SHALL BE 0-10V DC.

SHEET KEYNOTES

1. CONTRACTOR TO RECONNECT EXISTING LIGHTING CIRCUITS IN WAREHOUSE TO NEW PANEL "P1". SEE PANEL SCHEDULES, E-601. CONTRACTOR TO FIELD VERIFY THAT EXISTING LIGHTING CIRCUITS DO NOT EXCEED 20A CIRCUIT BREAKER CAPACITY.
2. EXHAUST FAN TO BE CONTROLLED BY LIGHTING SWITCH IN ROOM. SEE SHEET E-102 AND MECHANICAL FOR EXHAUST FAN LOCATIONS.
3. PROVIDE CHAIN HUNG OR PENDANT MOUNT FOR LIGHTING FIXTURES IN THIS ROOM.

WILSON & COMPANY
4900 LANG AVENUE NE
ALBUQUERQUE, NM 87109
PHONE: (505) 348-4000

CONSULTANTS

SEAL

PHILLIP J. SITGES
NEW MEXICO
22284
PROFESSIONAL ENGINEER
7/15/2015

PROJECT NAME:
OTERO COUNTY
EMERGENCY OPERATIONS CENTER
ALAMOGORDO, NM

MARK	DATE	DESCRIPTION
-	07-15-15	PERMIT DOCUMENTS

PROJECT NO: 15-600-204-01

DRAWN BY PJM

CHECKED BY RJS

SHEET TITLE
ELECTRICAL LIGHTING PLAN

E-101

SHEET ___ OF ___

7/20/2015 2:45:55 PM

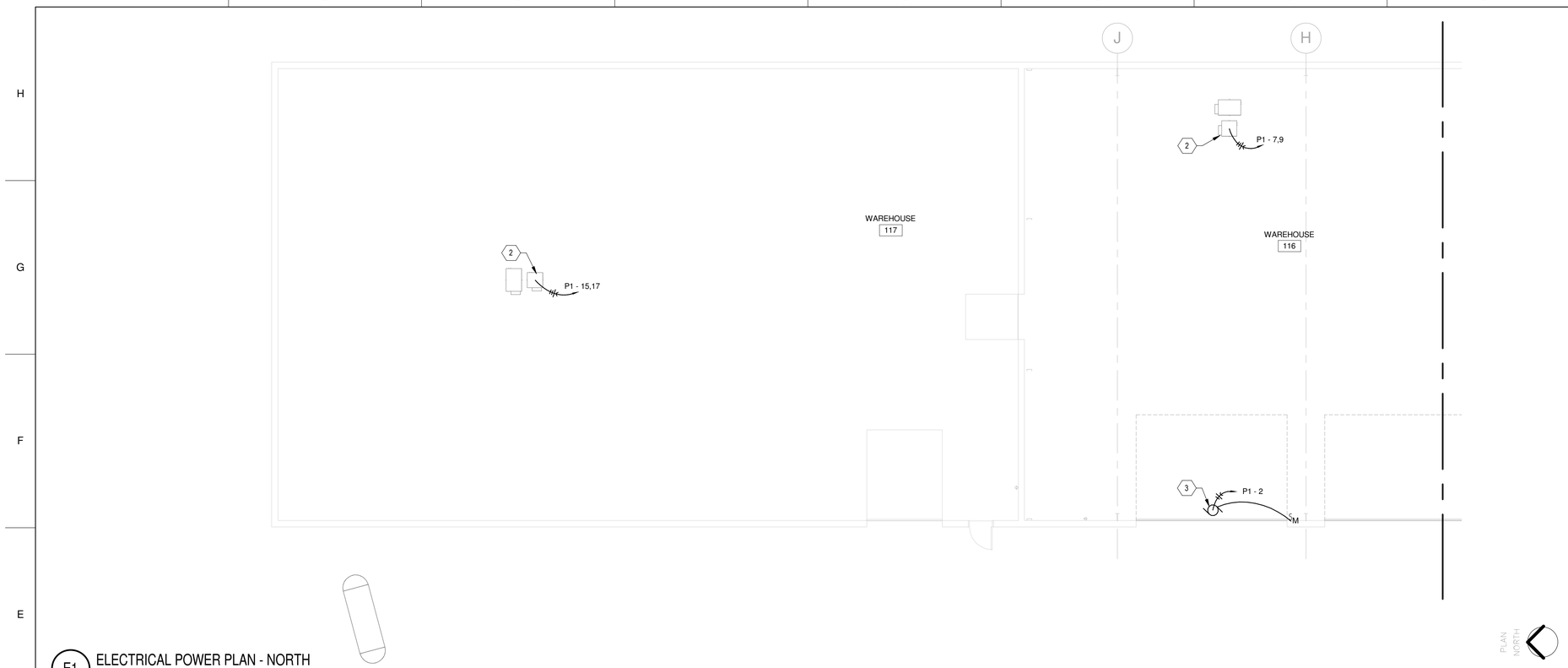

E1 ELECTRICAL POWER PLAN - NORTH

1/8" = 1'-0"

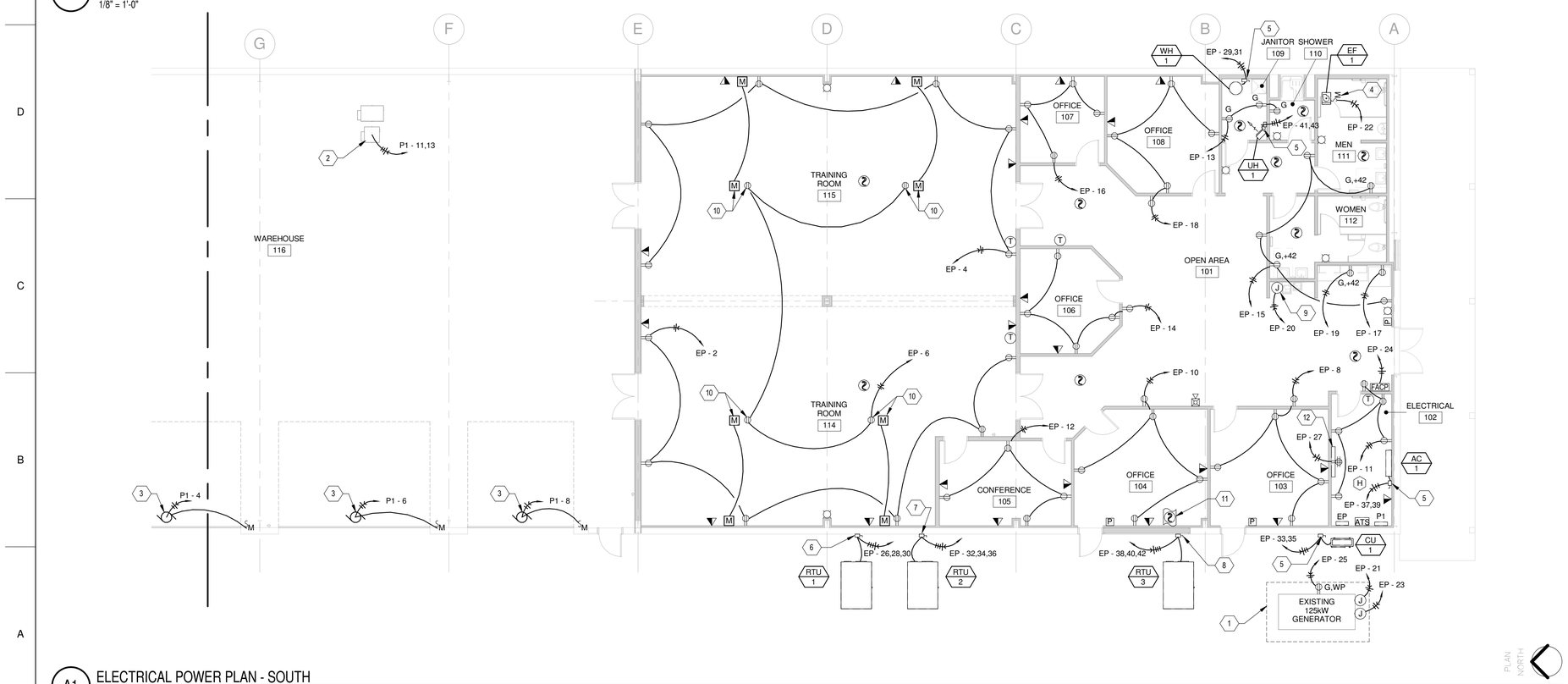

A1 ELECTRICAL POWER PLAN - SOUTH

1/8" = 1'-0"

GENERAL SHEET NOTES

1. SEE SHEET E-601 FOR PANEL SCHEDULES.
2. COORDINATE INSTALLATION WITH OTHER TRADES.
3. ALL WORK SHALL COMPLY WITH THE LATEST VERSION OF THE NEC ENFORCED BY THE AUTHORITY HAVING JURISDICTION.
4. ALL WIRES ARE #12 AWG, UNLESS NOTED OTHERWISE.
5. COORDINATE MOUNTING HEIGHT OF RECEPTACLES MOUNTED ABOVE CASEWORK WITH ARCHITECTURAL PRIOR TO ROUGH-IN.
6. RECEPTACLES SHOWN TO BE INSTALLED ADJACENT TO A LAVATORY OR SINK ARE ALSO SHOWN TO HAVE GFCI PROTECTION. ALL OTHER RECEPTACLES INSTALLED WITHIN 6 FEET (1.8 M) FROM THE EDGE OF THE LAVATORY OR SINK SHALL ALSO HAVE GFCI PROTECTION, AS REQUIRED BY NEC. RECEPTACLES INSTALLED IN OTHER LOCATIONS REQUIRED BY NEC TO HAVE GFCI PROTECTION SHALL ALSO COMPLY WITH THESE REQUIREMENTS, AS SHOWN ON PLANS.
7. REFER TO ELECTRICAL SITE PLAN, SHEET ES101, FOR ADDITIONAL WORK.
8. ALL TELECOM DROPS TO BE MOUNTED AT SAME HEIGHT AS ADJACENT RECEPTACLE UNLESS NOTED OTHERWISE.
9. PROVIDE CONDUIT FOR SYSTEMS WIRING ABOVE CEILING THROUGH FULL HEIGHT WALLS AS NEEDED.
10. PLAN DRAWINGS ARE DIAGRAMMATIC IN NATURE AND IT IS THE RESPONSIBILITY OF THE CONTRACTOR TO PROVIDE ALL POWER AND CONTROL WIRING REQUIRED FOR A COMPLETE AND OPERATIONAL FACILITY.
11. COORDINATE ABOVE-COUNTER TELE/DATA RECEPTACLE MOUNTING HEIGHT WITH ARCHITECTURAL ELEVATIONS PRIOR TO ROUGH-IN.
12. FOR ALL DATA DROPS PROVIDE SINGLE GANG BOX WITH MUD RING, 3/4" CONDUIT STUBBED 6" ABOVE CEILING WITH NYLON PULLSTRING.

FIRE ALARM GENERAL NOTES

1. ALL FIRE ALARM SYSTEM EQUIPMENT SHALL FULLY COMPLY WITH NFPA 72 AND BE INSTALLED IN STRICT ACCORDANCE WITH NFPA 70 ARTICLE 760.
2. ALL FIRE ALARM SYSTEM WIRING SHALL BE ROUTED IN METALLIC CONDUIT. THE FIRE ALARM SYSTEM SHALL NOT SHARE CONDUIT WITH OTHER WIRING SYSTEMS.
3. THE FIRE ALARM SYSTEM CONDUIT SHALL CONTAIN ONLY FIRE ALARM SYSTEM CABLES. JUNCTION BOXES AND COVERS SHALL BE PAINTED RED TO CLEARLY DENOTE THE FIRE ALARM RACEWAY SYSTEM.
4. ALL FIRE ALARM SYSTEM WIRING SHALL BE POWER LIMITED, UL LISTED FIRE ALARM CABLE. SEE FIRE ALARM SYSTEM SPECIFICATIONS. ALL FIRE ALARM CABLE SHALL BE COLOR CODED.
5. THE CONTRACTOR SHALL BE RESPONSIBLE FOR CONNECTING THE FIRE ALARM CONTROL PANEL TO TELEPHONE SERVICE FOR CONTACTING THE FIRE DEPARTMENT.
6. THE CONTRACTOR SHALL BE RESPONSIBLE FOR SCHEDULING AND CONDUCTING A PRELIMINARY TEST OF THE FIRE ALARM SYSTEM AND TELEPHONE LINES PRIOR TO THE FIRE MARSHAL'S OCCUPANCY TEST. ONCE THE CONTRACTOR HAS SUCCESSFULLY TESTED THE SYSTEM, SCHEDULE AND CONDUCT THE FIRE MARSHAL'S OCCUPANCY TEST FOR FINAL COMMISSIONING.
7. IF REQUIRED BY LOCAL CODE, PROVIDE ADDRESSABLE DUCT SMOKE DETECTORS IN ALL AIR HANDLING UNITS RATED 2,000 CFM AND GREATER. PROVIDE A DUCT SMOKE DETECTOR IN THE RETURN DUCT OF UNITS 2,000 CFM AND GREATER. PROVIDE A DUCT SMOKE DETECTOR IN THE RETURN DUCT AND IN THE SUPPLY DUCT OF UNITS 10,000 CFM OR GREATER. PROVIDE A DUCT SMOKE DETECTOR REMOTE TEST STATION FOR ALL SMOKE DETECTORS, MOUNTED AT AN ACCESSIBLE LOCATION. PROVIDE AN ADDRESSABLE FAN SHUTDOWN RELAY IN ALL AIR-HANDLING UNITS WITH SMOKE DETECTORS. PROVIDE ALL REQUIRED WIRING AND POWER SUPPLIES FOR A COMPLETE AND FUNCTIONING SYSTEM.

SHEET KEYNOTES

1. RELOCATE EXISTING 125kW GENERATOR ACROSS PARKING LOT NEXT TO FENCE, 40' APPROXIMATE DISTANCE WEST OF BUILDING. COORDINATE EXACT LOCATION WITH OWNER. CONNECT GENERATOR TO ATS AND ADDITIONAL CIRCUITS TO PANEL "EP". SEE PANEL SCHEDULE AND RISER DIAGRAM, SHEET E-601, FOR MORE INFORMATION.
2. RECONNECT EXISTING MECHANICAL UNIT CIRCUIT TO NEW PANEL "P1". CONTRACTOR TO FIELD VERIFY EXISTING MECHANICAL UNIT LOADS.
3. PROVIDE 20A/240V MOTOR SNAP SWITCH FOR OWNER SUPPLIED GARAGE DOOR MOTORS.
4. PROVIDE 20A/240V MOTOR SNAP SWITCH MOUNTED ON EXHAUST FAN.
5. PROVIDE 30A/2P/208V DISCONNECT SWITCH IN NEMA 1 ENCLOSURE. FEEDER: 2#12 AND 1#12 GROUND IN 3/4" CONDUIT.
6. PROVIDE 30A/3P/208V DISCONNECT SWITCH IN NEMA 3R ENCLOSURE. FEEDER: 2#10 AND 1#12 GROUND IN 3/4" CONDUIT.
7. PROVIDE 60A/3P/208V DISCONNECT SWITCH IN NEMA 3R ENCLOSURE. FEEDER: 3#10 AND 1#10 GROUND IN 3/4" CONDUIT.
8. PROVIDE 60A/3P/208V DISCONNECT SWITCH IN NEMA 3R ENCLOSURE. FEEDER: 3#8 AND 1#10 GROUND IN 3/4" CONDUIT.
9. PROVIDE JUNCTION BOX, HARD WIRED CONNECTION FOR WATER COOLER.
10. PROVIDE CEILING MOUNTED RECEPTACLE AND HDMI/VGA (MEDIA) CONNECTION FOR OVERHEARD PROJECTOR. INSTALL MEDIA CONNECTION ON WALL AS SHOWN. CONNECT 1" CONDUIT WITH NYLON PULLSTRING FROM MEDIA CONNECTIONS AT CEILING TO WALL. COORDINATE LOCATION AND MEDIA CONNECTIONS WITH OWNER.
11. PROVIDE DUCT SMOKE DETECTOR FOR THE MECHANICAL UNIT RETURN AIR AT THIS LOCATION.
12. PROVIDE 4'x4'x3/4" IT BACKBOARD AT THIS LOCATION.

WILSON & COMPANY
4900 LANG AVENUE NE
ALBUQUERQUE, NM 87109
PHONE: (505) 348-4000

CONSULTANTS

SEAL

PHILLIP J. SITGES
NEW MEXICO
22284
PROFESSIONAL ENGINEER
7/15/2015

PROJECT NAME:
OTERO COUNTY
EMERGENCY OPERATIONS CENTER
ALAMOGORDO, NM

MARK	DATE	DESCRIPTION
-	07-15-15	PERMIT DOCUMENTS

PROJECT NO: 15-600-204-01

DRAWN BY PJM

CHECKED BY RJS

SHEET TITLE
ELECTRICAL POWER PLAN

E-102

SHEET ___ OF ___

7/20/2015 2:45:57 PM

Branch Panel: P1

Location: ELECTRICAL ROOM
Supply From: MAIN SERVICE
Mounting: SURFACE
Enclosure: NEMA 1

Volts: 120/208 Wye
Phases: 3
Wires: 4

A.I.C. Rating: 22,000
Mains Type: MCB
Mains Rating: 400 A
MCB Rating: 400 A

Notes:

CKT	Circuit Description	Trip	Poles	A		B		C		Poles	Trip	Circuit Description	CKT
1	LIGHTING - WAREHOUSE (EXISTING LOAD)	20 A	1	1152...	1656...					1	20 A	GARAGE DOOR MOTOR	2
3	LIGHTING - WAREHOUSE (EXISTING LOAD)	20 A	1			1664...	1656...			1	20 A	GARAGE DOOR MOTOR	4
5	LIGHTING - WAREHOUSE (EXISTING LOAD)	20 A	1					1152...	1656...	1	20 A	GARAGE DOOR MOTOR	6
7	EVAP COOLER - WAREHOUSE (EXISTING LOAD)	20 A	2	1175...	1656...					1	20 A	GARAGE DOOR MOTOR	8
9	--	--	--			1175...	0 VA			1	20 A	Spare	10
11	EVAP COOLER - WAREHOUSE (EXISITNG LOAD)	20 A	2					1175...	0 VA	1	20 A	Spare	12
13	--	--	--	1175...	0 VA					1	20 A	Spare	14
15	UNIT HEATER - WAREHOUSE (EXISTING LOAD)	20 A	2			1144...	0 VA			1	20 A	Spare	16
17	--	--	--					1144...	0 VA	1	20 A	Spare	18
19	Spare	20 A	1	0 VA	0 VA					1	20 A	Spare	20
21	Spare	20 A	1			0 VA	0 VA			1	20 A	Spare	22
23	Spare	20 A	1					0 VA	0 VA	1	20 A	Spare	24
25	EP - PANEL	225 A	3	20165...	0 VA					--	--	Space	26
27	--	--	--			19202...	0 VA			--	--	Space	28
29	--	--	--					18889...	0 VA	--	--	Space	30
				Total Load:		26979 VA		24841 VA		24016 VA			
				Total Amps:		226 A		208 A		200 A			

Legend:

Load Classification	Connected Load	Demand Factor	Estimated Demand	Panel Totals	
Equipment	57590 VA	100.00%	57590 VA		
Lighting	7615 VA	100.00%	7615 VA	**Total Conn. Load:**	76005 VA
Receptacle	10800 VA	96.30%	10400 VA	**Total Est. Demand:**	75605 VA
				Total Conn. Current:	211 A
				Total Est. Demand Current:	210 A

Notes:

Branch Panel: EP

Location: ELECTRICAL ROOM
Supply From: P1
Mounting: SURFACE
Enclosure: NEMA 1

Volts: 120/208 Wye
Phases: 3
Wires: 4

A.I.C. Rating: 22,000
Mains Type: MCB
Mains Rating: 225 A
MCB Rating: 225 A

Notes:

CKT	Circuit Description	Trip	Poles	A		B		C		Poles	Trip	Circuit Description	CKT
1	LIGHTING - TRAINING ROOM 115	20 A	1	1140...	1080...					1	20 A	RECEPTACLE - TRAINING ROOM 114	2
3	LIGHTING - TRAINING ROOM 114	20 A	1			1064...	1080...			1	20 A	RECEPTACLE - TRAINING ROOM 115	4
5	LIGHTING - WEST ROOMS	20 A	1					464 VA	720 VA	1	20 A	RECEPTACLE - PROJECTORS TRAINING...	6
7	LIGHTING - OPEN AREA & OFFICE 106	20 A	1	524 VA	900 VA					1	20 A	RECEPTACLE - OFFICE 103	8
9	LIGHTING - EAST ROOMS & RESTROOMS	20 A	1			455 VA	900 VA			1	20 A	RECEPTACLE - OFFICE 104	10
11	RECEPTACLE - ELECTRICAL ROOM 102	20 A	1					900 VA	720 VA	1	20 A	RECEPTACLE - CONFERENCE ROOM 105	12
13	RECEPTACLE - JANITORS 109	20 A	1	540 VA	900 VA					1	20 A	RECEPTACLE - OFFICE 106	14
15	RECEPTACLE - RESTROOMS	20 A	1			900 VA	720 VA			1	20 A	RECEPTACLE - OFFICE 107	16
17	RECEPTACLE - FRIDGE	20 A	1					1000...	900 VA	1	20 A	RECEPTACLE - OFFICE 108	18
19	RECEPTACLE - BREAK AREA	20 A	1	1000...	370 VA					1	15 A	WATER COOLER	20
21	GENERATOR BLOCK HEATER	20 A	1			500 VA	408 VA			1	15 A	EF-1	22
23	GENERATOR BATTERY CHARGER	20 A	1					500 VA	100 VA	1	20 A	FACP	24
25	RECEPTACLE - GENERATOR	20 A	1	180 VA	2330...					3	25 A	RTU-1	26
27	RECEPTACLE - IT BACKBOARD	20 A	1			360 VA	2330...			--	--	--	28
29	WH-1	20 A	2					1500...	2330...	--	--	--	30
31	--	--	--	1500...	2738...					3	35 A	RTU-2	32
33	CU-1	20 A	2			1903...	2738...			--	--	--	34
35	--	--	--					1903...	2738...	--	--	--	36
37	AC-1	20 A	2	1903...	4011...					3	50 A	RTU-3	38
39	--	--	--			1903...	4011...			--	--	--	40
41	UH-1	20 A	2					1125...	4011...	--	--	--	42
43	--	--	--	1125...	0 VA					1	20 A	Spare	44
45	Spare	20 A	1			0 VA	0 VA			1	20 A	Spare	46
47	Spare	20 A	1					0 VA	0 VA	1	20 A	Spare	48
49	Spare	20 A	1	0 VA	0 VA					1	20 A	Spare	50
51	Spare	20 A	1			0 VA	0 VA			1	20 A	Spare	52
53	Spare	20 A	1					0 VA	0 VA	1	20 A	Spare	54
				Total Load:		20241 VA		19272 VA		18911 VA			
				Total Amps:		169 A		161 A		158 A			

Legend:

Load Classification	Connected Load	Demand Factor	Estimated Demand	Panel Totals	
Equipment	43978 VA	100.00%	43978 VA		
Lighting	3647 VA	100.00%	3647 VA	**Total Conn. Load:**	58425 VA
Receptacle	10800 VA	96.30%	10400 VA	**Total Est. Demand:**	58025 VA
				Total Conn. Current:	162 A
				Total Est. Demand Current:	161 A

Notes:

LIGHTING FIXTURE SCHEDULE

TYPE	DESCRIPTION	VOLTS	MOUNTING	LAMPS	LENS	MANUFACTURER	MODEL #	NOTES
A1	PENDANT HUNG LED LIGHTING FIXTURE, 8' UNIT, ARCHITECTURAL CONTOURED LOUVER, CONTINOUS ROW MOUNTING, TEXTURED GRAY MATTE FINISH	120	PENDANT HUNG 10' AFF	LED (76 W)	N/A	HE WILLIAMS	AXA-8-L62/840-LVRS-J-ACF/96-DIM-UNV	PROVIDE END CAPS ON ROW LENGTHS, STANDARD WIRED CORD ON NORTH END OF ROW.
B1	LED LOW PROFILE RECESSED 2x4 TROFFER, CODE GAUGED STEEL HOUSING, T-BAR CLIPS, ACRYLIC FULL RADIUS LENS, MATTE WHITE POLYESTER POWDER FINISH	120	RECESSED	LED (36 W)	ACRYLIC	LSI INDUSTRIES	LPEC24-LED-SS-NW-UE-SD50	
B2	LED LOW PROFILE RECESSED 2x2 TROFFER, CODE GAUGED STEEL HOUSING, T-BAR CLIPS, ACRYLIC FULL RADIUS LENS, MATTE WHITE POLYESTER POWDER FINISH	120	RECESSED	LED (29 W)	ACRYLIC	LSI INDUSTRIES	LPEC22-LED-SS-NW-UE-SD50	
C1	LED LOW PROFILE 10" WIDTH WRAP AROUND SURFACE MOUNTED FIXTURE, CODE GAUGED STEEL HOUSING, IMPACT RESISTANT ACRYLIC LENS, WHITE POLYESTER POWDER FINISH	120	SURFACE	LED (33 W)	ACRYLIC	LSI INDUSTRIES	WNA10-LEDSS-NW-UE-SD50	
D1	LED WALL/SURFACE MOUNT LINEAR FIXTURE, CODE GAUGED STEEL HOUSING, ACRYLIC PRISMATIC LENS, WHITE POLYESTER POWDER FINISH	120	WALL 7" AFF	LED (35 W)	ACRYLIC	LSI INDUSTRIES	W444-LED-SS-NW-UE-SD50	
E1	LED THERMOPLASTIC EMERGENCY FIXTURE, IMPACT RESISTANT, LOW PROFILE, FULLY ADJUSTABLE, NFPA 101 COMPLIANT, WHITE FINISH	120	SURFACE	LED	N/A	LSI INDUSTRIES	LTEM-WH-SD2	
F1	LED STRIP SURFACE LIGHTING FIXTURE, CODE GAUGED STEEL HOUSING, WHITE POLYESTER POWDER FINISH	120	SURFACE	LED (34 W)	N/A	LSI INDUSTRIES	S-4-LED-SS-NW	
X1	LED EXIT FIXTURE SIGN, BATTERY BACK-UP, IMPACT RESISTANT, NFPA 101 COMPLIANT, RED LETTERING, WHITE FINISH	120	SURFACE	LED	N/A	LSI INDUSTRIES	EX-R-U-WB-WH-SD2	

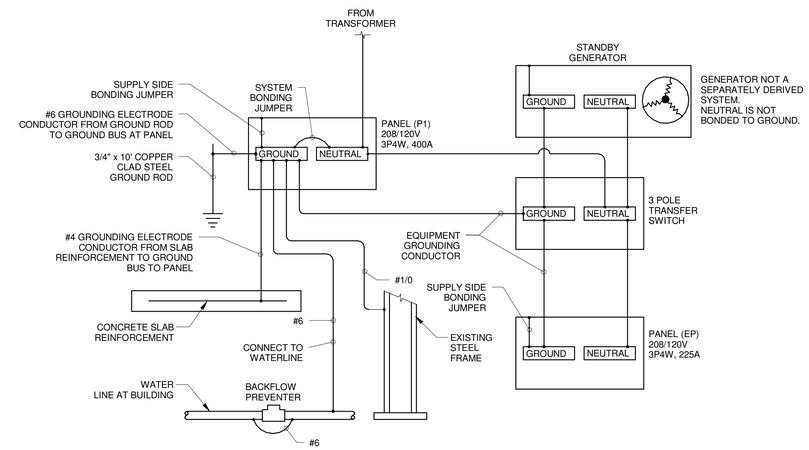

E7 ELECTRICAL GROUNDING DIAGRAM
NTS

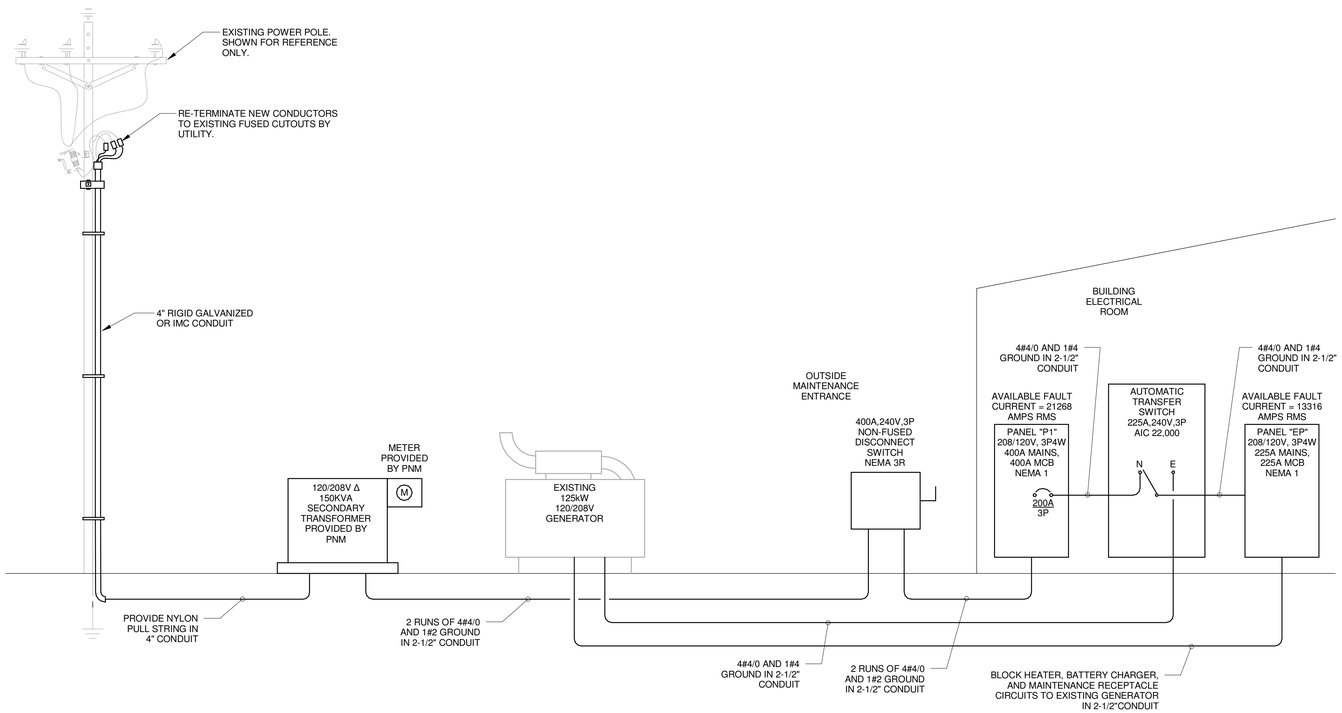

A5 ELECTRICAL RISER DIAGRAM
NTS

WILSON & COMPANY
4900 LANG AVENUE NE
ALBUQUERQUE, NM 87109
PHONE: (505) 348-4000

CONSULTANTS

SEAL
PHILLIP J. SITGES
NEW MEXICO
22284
PROFESSIONAL ENGINEER
7/15/2015

PROJECT NAME:
OTERO COUNTY
EMERGENCY OPERATIONS CENTER
ALAMOGORDO, NM

MARK	DATE	DESCRIPTION
-	07-15-15	PERMIT DOCUMENTS

PROJECT NO: 15-600-204-01
DRAWN BY PJM
CHECKED BY RJS

SHEET TITLE
ELECTRICAL DIAGRAMS AND SCHEDULES

E-601

SHEET ___ OF ___

7/20/2015 2:45:57 PM

OTERO COUNTY
EMERGENCY SERVICES

EMERGENCY OPERATIONS CENTER (EOC) RENOVATION

PROJECT MANUAL

July 15, 2015

Otero County Emergency Services
1101 New York Ave
Alamogordo, New Mexico 88310
(505) 437-7427

Wilson & Company, Inc., Engineers & Architects
4900 Lang Avenue, NE, Albuquerque, NM 87109
(505) 348-4000 www.wilsonco.com
WCI File: 15-600-204-01

SECTION 00 0110
TABLE OF CONTENTS

DIVISION 00
00 0110 - Table of Contents

SPECIFICATIONS

DIVISION 01 -- GENERAL REQUIREMENTS
01 1000 - Summary
01 6400 - Owner-Furnished Products
01 7000 - Execution and Closeout Requirements

DIVISION 02 -- EXISTING CONDITIONS
02 4100 - Demolition

DIVISION 05 -- METALS
05 1200 - Structural Steel Framing
05 4000 - Cold-Formed Metal Framing
05 5000 - Metal Fabrications

DIVISION 06 -- WOOD, PLASTICS, AND COMPOSITES
06 1000 - Rough Carpentry
06 8201 - Glass Fiber Reinforced Plastic

DIVISION 07 -- THERMAL AND MOISTURE PROTECTION
07 2100 - Thermal Insulation
07 4213 - Metal Wall Panels
07 9200 - Joint Sealants

DIVISION 08 -- OPENINGS
08 1113 - Hollow Metal Doors and Frames
08 3613 - Sectional Doors
08 7100 - Door Hardware

DIVISION 09 -- FINISHES
09 2116 - Gypsum Board Assemblies
09 5100 - Acoustical Ceilings
09 6500 - Resilient Flooring
09 9000 - Paints and Coatings

DIVISION 10 -- SPECIALTIES
10 1400 - Signage
10 2800 - Toilet, Bath, and Laundry Accessories
10 4400 - Fire Protection Specialties

DIVISION 12 -- FURNISHINGS
12 3530 - Residential Casework

DIVISION 22 -- PLUMBING
22 0516 - Expansion Fittings and Loops for Plumbing Piping
22 0548 - Vibration and Seismic Controls for Plumbing Piping and Equipment
22 0553 - Identification for Plumbing Piping and Equipment
22 0719 - Plumbing Piping Insulation
22 1005 - Plumbing Piping
22 1006 - Plumbing Piping Specialties

22 3000 - Plumbing Equipment
22 4000 - Plumbing Fixtures

DIVISION 23 -- HEATING, VENTILATING, AND AIR-CONDITIONING (HVAC)
23 0513 - Common Motor Requirements for HVAC Equipment
23 0548 - Vibration and Seismic Controls for HVAC Piping and Equipment
23 0553 - Identification for HVAC Piping and Equipment
23 0593 - Testing, Adjusting, and Balancing for HVAC
23 0713 - Duct Insulation
23 0719 - HVAC Piping Insulation
23 0800 - Commissioning of HVAC
23 0913 - Instrumentation and Control Devices for HVAC
23 2300 - Refrigerant Piping
23 3100 - HVAC Ducts and Casings
23 3300 - Air Duct Accessories
23 3423 - HVAC Power Ventilators
23 3700 - Air Outlets and Inlets
23 8127 - Small Split-System Heating and Cooling

DIVISION 26 -- ELECTRICAL
(See Drawings)

END OF SECTION

SECTION 01 6400

OWNER-FURNISHED PRODUCTS

PART 1 GENERAL

1.01 SECTION INCLUDES

A. Owner-furnished products and materials to be installed by Contractor.
   1. Procedures and requirements for coordinating, scheduling, handling, and storing Owner-furnished products and materials to be installed by Contractor.

1.02 ADMINISTRATIVE REQUIREMENTS

A. Cooperate with Owner to minimize conflict and to facilitate Owner's operations.

B. Coordination: Coordinate the installation of Owner-furnished products with size, location and installation of service utilities.

PART 2 PRODUCTS

2.01 OWNER-FURNISHED PRODUCTS TO BE INSTALLED BY CONTRACTOR

A. The following items will be provided by the Owner, for installation by the Contractor at the locations indicated:
   1. Operable Partition
   2. Emergency Generator

PART 3 EXECUTION

3.01 EXAMINATION

A. Verification of Conditions: Verify utility rough in and final connection requirements are ready to receive the work.

3.02 INSTALLATION

A. Install products and materials in accordance with manufacturer's requirements and local authorities having jurisdiction, whichever is more stringent.

3.03 ADJUSTING

A. Adjust products for smooth operation.

3.04 CLEANING

A. Clean products and materials.

3.05 PROTECTION

A. Protect installed items from subsequent construction operations.

END OF SECTION

SECTION 01 7000

EXECUTION AND CLOSEOUT REQUIREMENTS

PART 1 GENERAL

1.01 SUBMITTALS

A. Cutting and Patching: Submit written request in advance of cutting or alteration that affects:
   1. Structural integrity of any element of Project.
   2. Integrity of weather exposed or moisture resistant element.
   3. Efficiency, maintenance, or safety of any operational element.

1.02 PROJECT CONDITIONS

A. Ventilate enclosed areas to assist cure of materials, to dissipate humidity, and to prevent accumulation of dust, fumes, vapors, or gases.

PART 2 PRODUCTS

2.01 PATCHING MATERIALS

A. New Materials: As specified in product sections; match existing products and work for patching and extending work.

B. Type and Quality of Existing Products: Determine by inspecting and testing products where necessary, referring to existing work as a standard.

PART 3 EXECUTION

3.01 LAYING OUT THE WORK

A. Promptly notify Owner of any discrepancies discovered.

B. Establish elevations, lines and levels. Locate and lay out by instrumentation and similar appropriate means:

3.02 GENERAL INSTALLATION REQUIREMENTS

A. Install products as specified in individual sections, in accordance with manufacturer's instructions and recommendations, and so as to avoid waste due to necessity for replacement.

B. Make vertical elements plumb and horizontal elements level, unless otherwise indicated.

C. Install equipment and fittings plumb and level, neatly aligned with adjacent vertical and horizontal lines, unless otherwise indicated.

D. Make consistent texture on surfaces, with seamless transitions, unless otherwise indicated.

E. Make neat transitions between different surfaces, maintaining texture and appearance.

3.03 CUTTING AND PATCHING

A. Whenever possible, execute the work by methods that avoid cutting or patching.

B. Perform whatever cutting and patching is necessary to:
   1. Complete the work.
   2. Fit products together to integrate with other work.
   3. Provide openings for penetration of mechanical, electrical, and other services.
   4. Match work that has been cut to adjacent work.
   5. Repair areas adjacent to cuts to required condition.
   6. Repair new work damaged by subsequent work.
   7. Remove samples of installed work for testing when requested.
   8. Remove and replace defective and non-conforming work.

C. Execute work by methods that avoid damage to other work and that will provide appropriate surfaces to receive patching and finishing. In existing work, minimize damage and restore to original condition.

D. Patching:

1. Finish patched surfaces to match finish that existed prior to patching. On continuous surfaces, refinish to nearest intersection or natural break. For an assembly, refinish entire unit.

3.04 PROGRESS CLEANING

A. Maintain areas free of waste materials, debris, and rubbish. Maintain site in a clean and orderly condition.

3.05 PROTECTION OF INSTALLED WORK

A. Protect installed work from damage by construction operations.

B. Provide special protection where specified in individual specification sections.

C. Remove protective coverings when no longer needed; reuse or recycle plastic coverings if possible.

3.06 FINAL CLEANING

A. Use cleaning materials that are nonhazardous.

B. Clean interior and exterior glass, surfaces exposed to view; remove temporary labels, stains and foreign substances, polish transparent and glossy surfaces, vacuum carpeted and soft surfaces.

C. Remove all labels that are not permanent. Do not paint or otherwise cover fire test labels or nameplates on mechanical and electrical equipment.

D. Clean equipment and fixtures to a sanitary condition with cleaning materials appropriate to the surface and material being cleaned.

3.07 CLOSEOUT PROCEDURES

A. Make submittals that are required by governing or other authorities.

B. Submit written certification containing Contractor's Correction Punch List, that Contract Documents have been reviewed, work has been inspected, and that work is complete in accordance with Contract Documents.

END OF SECTION

SECTION 02 4100
DEMOLITION

PART 1 GENERAL

1.01 SUBMITTALS

A. Project Record Documents: Accurately record actual locations of capped and active utilities and subsurface construction.
   1. Identify horizontal and vertical locations of the top and/or bottom of utilities referenced from the project survey control datum.
   2. Identify outside diameter of piping.

PART 3 EXECUTION

2.01 GENERAL PROCEDURES AND PROJECT CONDITIONS

A. Comply with applicable codes and regulations for demolition operations and safety of adjacent structures and the public.
   1. Obtain required permits.
   2. Comply with applicable requirements of NFPA 241.
   3. Use of explosives is not permitted.
   4. Take precautions to prevent catastrophic or uncontrolled collapse of structures to be removed; do not allow worker or public access within range of potential collapse of unstable structures.
   5. Provide, erect, and maintain temporary barriers and security devices.

B. Minimize production of dust due to demolition operations; do not use water if that will result in ice, flooding, sedimentation of public waterways or storm sewers, or other pollution.

C. If hazardous materials are discovered during removal operations, stop work and notify Architect and Owner; hazardous materials include regulated asbestos containing materials, lead, PCB's, and mercury.

2.02 EXISTING UTILITIES

A. Coordinate work with utility companies; notify before starting work and comply with their requirements; obtain required permits.

B. Protect existing utilities to remain from damage.

2.03 SELECTIVE DEMOLITION FOR ALTERATIONS

A. Drawings showing existing construction and utilities are based on casual field observation and existing record documents only.

B. Maintain weatherproof exterior building enclosure except for interruptions required for replacement or modifications; take care to prevent water and humidity damage.

C. Remove existing work as indicated and as required to accomplish new work.

2.04 SERVICES (INCLUDING BUT NOT LIMITED TO PLUMBING, FIRE PROTECTION, ELECTRICAL, AND TELECOMMUNICATIONS): REMOVE EXISTING SYSTEMS AND EQUIPMENT AS INDICATED.

A. Protect existing work to remain.

2.05 DEMOLITION, DEBRIS AND WASTE REMOVAL

A. Remove demolition, debris, junk, and trash from site.

END OF SECTION

SECTION 05 1200

STRUCTURAL STEEL FRAMING

PART 1 GENERAL

1.01 SUBMITTALS

A. Shop Drawings:
   1. Indicate profiles, sizes, spacing, locations of structural members, openings, attachments, and fasteners.
   2. Connections.
   3. Indicate welded connections with AWS A2.4 welding symbols. Indicate net weld lengths.

1.02 QUALITY ASSURANCE

A. Fabricate structural steel members in accordance with AISC "Steel Construction Manual."

PART 2 PRODUCTS

2.01 MATERIALS

A. Steel Angles and Plates: ASTM A36/A36M.

B. Steel W Shapes and Tees: ASTM A992/A992M.

C. Hot-Formed Structural Tubing: ASTM A501/A501M, seamless or welded.

D. High-Strength Structural Bolts, Nuts, and Washers: ASTM A325 or A325M, Type 1, medium carbon, galvanized, with matching compatible ASTM A563 or A563M nuts and ASTM F436 washers.

2.02 FABRICATION

A. Shop fabricate to greatest extent possible.

B. Continuously seal joined members by continuous welds. Grind exposed welds smooth.

C. Fabricate connections for bolt, nut, and washer connectors.

2.03 FINISH

A. Leave structural steel members un-primed.

PART 3 EXECUTION

3.01 ERECTION

A. Erect structural steel in compliance with AISC "Code of Standard Practice for Steel Buildings and Bridges".

END OF SECTION

SECTION 05 4000

COLD-FORMED METAL FRAMING

PART 1 GENERAL

1.01 SUBMITTALS

A. Product Data: Provide data on standard framing members; describe materials and finish, product criteria, limitations .

B. Shop Drawings: Indicate component details, framed openings, bearing, anchorage, loading, welds, and type and location of fasteners, and accessories or items required of related work.

PART 2 PRODUCTS

2.01 FRAMING SYSTEM

A. Provide primary and secondary framing members, bridging, bracing, plates, gussets, clips, fittings, reinforcement, and fastenings as required to provide a complete framing system.

B. Design Criteria: Provide completed framing system having the following characteristics:
   1. Design: Calculate structural characteristics of cold-formed steel framing members according to AISI S100-12.
   2. Design Loads: In accordance with applicable codes.
   3. Live load deflection meeting the following, unless otherwise indicated:
      a. Exterior Walls: Maximum horizontal deflection under wind load of 1/180 of span.

2.02 FRAMING MATERIALS

A. Studs and Track: ASTM C955; studs formed to channel, "C", or "Sigma" shape with punched web; U-shaped track in matching nominal width and compatible height.
   1. Gage and Depth: As required to meet specified performance levels.

B. Joists and Purlins: Fabricated from either ASTM A1008/A1008M, Designation SS, or ASTM A1011/A1011M, Designation SS steel sheet, shop painted.
   1. Gage and Depth: As required to meet specified performance levels.

C. Framing Connectors: Factory-made, formed steel sheet.
   1. Material: ASTM A653/A653M SS Grade 33 and 40 (minimum), with G90/Z275 hot dipped galvanized coating for base metal thickness less than 10 gage, 0.1345 inch, and factory punched holes and slots.
   2. Structural Performance: Maintain load and movement capacity required by applicable code, when evaluated in accordance with AISI S100-12.

2.03 FASTENERS

A. Self-Drilling, Self-Tapping Screws, Bolts, Nuts and Washers: Hot dip galvanized per ASTM A153/A153M.

B. Anchorage Devices: Powder actuated.

PART 3 EXECUTION

3.01 INSTALLATION OF STUDS

A. Install components in accordance with manufacturers' instructions and ASTM C1007 requirements.

3.02 INSTALLATION OF JOISTS AND PURLINS

A. Install framing components in accordance with manufacturer's instructions.

END OF SECTION

SECTION 05 5000
METAL FABRICATIONS

PART 1 GENERAL

1.01 SUBMITTALS

A. Shop Drawings: Indicate profiles, sizes, connection attachments, reinforcing, anchorage, size and type of fasteners, and accessories. Include erection drawings, elevations, and details where applicable.

PART 2 PRODUCTS

2.01 MATERIALS - STEEL

A. Steel Sections: ASTM A36/A36M.

B. Steel Tubing: ASTM A501/A501M hot-formed structural tubing.

C. Plates: ASTM A283.

D. Bolts, Nuts, and Washers: ASTM A325 (ASTM A325M), Type 1, plain.

E. Welding Materials: AWS D1.1/D1.1M; type required for materials being welded.

2.02 FABRICATION

A. Fit and shop assemble items in largest practical sections, for delivery to site.

B. Fabricate items with joints tightly fitted and secured.

C. Continuously seal joined members by continuous welds.

D. Grind exposed joints flush and smooth with adjacent finish surface. Make exposed joints butt tight, flush, and hairline. Ease exposed edges to small uniform radius.

PART 3 EXECUTION

3.01 INSTALLATION

A. Install items plumb and level, accurately fitted, free from distortion or defects.

END OF SECTION

SECTION 06 1000

ROUGH CARPENTRY

PART 2 PRODUCTS

1.01 GENERAL REQUIREMENTS

A. Dimension Lumber: Comply with PS 20 and requirements of specified grading agencies.
   1. If no species is specified, provide any species graded by the agency specified; if no grading agency is specified, provide lumber graded by any grading agency meeting the specified requirements.
   2. Grading Agency: Any grading agency whose rules are approved by the Board of Review, American Lumber Standard Committee (www.alsc.org) and who provides grading service for the species and grade specified; provide lumber stamped with grade mark unless otherwise indicated.

B. Lumber fabricated from old growth timber is not permitted.

1.02 DIMENSION LUMBER FOR CONCEALED APPLICATIONS

A. Moisture Content: S-dry or MC19.

B. Miscellaneous Framing, Blocking, Nailers, Grounds, and Furring:
   1. Lumber: S4S, No. 2 or Standard Grade.
   2. Boards: Standard or No. 3.

1.03 CONSTRUCTION PANELS

A. Communications and Electrical Room Mounting Boards: PS 1 A-D plywood, or medium density fiberboard; 3/4 inch thick; flame spread index of 25 or less, smoke developed index of 450 or less, when tested in accordance with ASTM E84.

1.04 FACTORY WOOD TREATMENT

A. Treated Lumber and Plywood: Comply with requirements of AWPA U1 - Use Category System for wood treatments determined by use categories, expected service conditions, and specific applications.
   1. Fire-Retardant Treated Wood: Mark each piece of wood with producer's stamp indicating compliance with specified requirements.

PART 3 EXECUTION

2.01 INSTALLATION - GENERAL

A. Select material sizes to minimize waste.

B. Where treated wood is used on interior, provide temporary ventilation during and immediately after installation sufficient to remove indoor air contaminants.

2.02 INSTALLATION OF CONSTRUCTION PANELS

A. Wall Sheathing: Secure with long dimension perpendicular to wall studs, with ends over firm bearing and staggered, using nails, screws, or staples.

END OF SECTION

SECTION 06 8200

GLASS FIBER REINFORCED PLASTIC

PART 1 GENERAL

1.01 SUBMITTALS

A. Shop Drawings: Indicate dimensions, adjacent construction, materials, thicknesses, fabrication details, required clearances, field jointing, tolerances, colors, finishes, methods of support, integration of plumbing components, and anchorages.

PART 2 PRODUCTS

2.01 MATERIALS

A. Plastic Panel System: Factory finished panels, trim, sealant, and accessories.

B. Panels: Fiberglass reinforced polyester
   1. Thickness: 3/32 inch, nominal.
   2. Product and Manufacturer: S 100G White, Marlite FR Class1/A, Marlite, www.marlite.com or approved equal.

C. Panel Trim: Extruded PVC

2.02 FINISH

A. Color: white.

B. Exposed to view Surface Texture: smooth.

PART 3 EXECUTION

3.01 INSTALLATION

A. Install fabrications in accordance with shop drawings and fabricator's instructions.

B. Sealant
   1. Seal corner seams, ceiling and base junctures, around door frames, wall-mounted fixtures and other openings, at tops of wainscots, wall terminations, and between penetrating items and panel cut-outs.
   2. Install continuous bead of silicone sealant in each joint and trim groove and between trim and adjacent construction, maintaining 1/8 inch expansion space.

END OF SECTION

SECTION 07 2100

THERMAL INSULATION

PART 1 GENERAL

1.01 SUBMITTALS

PART 2 PRODUCTS

2.01 BATT INSULATION MATERIALS

A. Where batt insulation is indicated, either glass fiber or mineral fiber batt insulation may be used, at Contractor's option.

B. Glass Fiber Batt Insulation: Flexible preformed batt or blanket, complying with ASTM C665; friction fit.

1. Combustibility: Non-combustible, when tested in accordance with ASTM E136, except for facing, if any.

C. Mineral Fiber Batt Insulation: Flexible or semi-rigid preformed batt or blanket, complying with ASTM C665; friction fit; unfaced flame spread index of 0 (zero) when tested in accordance with ASTM E84.

1. Smoke Developed Index: 0 (zero), when tested in accordance with ASTM E84.

PART 3 EXECUTION

3.01 BATT INSTALLATION

A. Install insulation in accordance with manufacturer's instructions.

B. Install in exterior wall and roof spaces without gaps or voids. Do not compress insulation.

END OF SECTION

SECTION 07 4213
METAL WALL PANELS

PART 2 PRODUCTS

1.01 MANUFACTURED METAL PANELS

A. Wall Panel System: Factory fabricated prefinished metal panel system, site assembled.
   1. Provide exterior panels and subgirt framing assembly.
   2. Design and size components to withstand dead and live loads caused by positive and negative wind pressure acting normal to plane of wall.
   3. Maximum Allowable Deflection of Panel: 1/90 of span.
   4. Movement: Accommodate movement within system without damage to components or deterioration of seals, movement within system; movement between system and perimeter components when subject to seasonal temperature cycling; dynamic loading and release of loads; and deflection of structural support framing.
   5. Drainage: Provide positive drainage to exterior for moisture entering or condensation occurring within panel system.
   6. Fabrication: Formed true to shape, accurate in size, square, and free from distortion or defects; pieces of longest practical lengths.
   7. Corners: Factory-fabricated in one continuous piece with minimum 18 inch returns.
   8. Exterior Finish: Panel manufacturer's standard polyvinylidene fluoride (PVDF) coating, top coat over epoxy primer.
   9. Exterior Panel Back Coating: Panel manufacturer's standard polyester wash coat.

B. Exterior Panels:
   1. Profile: Vertical; Match Existing.
   2. Side Seams: Double-interlocked, tight-fitting, sealed with continuous gaskets.
   3. Panel Width: ___ inches.

C. Subgirts:
   1. 12 gage, .1046 inch thick formed steel sheet.
   2. Profile as indicated; to attach panel system to building.

D. Internal and External Corners: Same material, thickness, and finish as exterior sheets; profile to suit system; shop cut and factory mitered to required angles.

E. Trim: Same material, thickness and finish as exterior sheets; brake formed to required profiles.

F. Anchors: Galvanized steel.

1.02 MATERIALS

A. Precoated Steel Sheet: Hot-dipped galvanized steel sheet, ASTM A653/A653M Structural Steel (SS) or Forming Steel (FS), with G90/Z275 coating; continuous coil-coated on exposed surfaces with specified finish coating and on panel back with specified panel back coating.

B. Insulation: ASTM C665 Type II Class A, glass fiber blanket;
   1. Thermal resistance R of 19.

1.03 ACCESSORIES

A. Sealants:
   1. Exposed Sealant: Elastomeric; silicone, polyurethane, or silyl-terminated polyether/polyurethane.
   2. Concealed Sealant: Non-curing butyl sealant or tape sealant.

B. Fasteners: Manufacturer's standard type to suit application; with soft neoprene washers, steel, hot dip galvanized. Fastener cap same color as exterior panel.

C. Field Touch-up Paint: As recommended by panel manufacturer.

PART 3 EXECUTION

2.01 INSTALLATION

A. Install panels on walls in accordance with manufacturer's instructions.

END OF SECTION

SECTION 07 9200
JOINT SEALANTS

PART 1 GENERAL

1.01 SUBMITTALS

A. Product Data for Sealants: Submit manufacturer's technical data sheets for each product to be used, that includes the following.
   1. Physical characteristics, including movement capability, VOC content, hardness, cure time, and color availability.
   2. List of backing materials approved for use with the specific product.
   3. Substrates that product is known to satisfactorily adhere to and with which it is compatible.
   4. Substrates the product should not be used on.

PART 2 PRODUCTS

2.01 JOINT SEALANT APPLICATIONS

A. Scope:
   1. Exterior Joints: Seal open joints, whether or not the joint is indicated on the drawings, unless specifically indicated not to be sealed. Exterior joints to be sealed include, but are not limited to, the following items.
      a. Joints between door, window, and other frames and adjacent construction.
      b. Joints between different exposed materials.
      c. Other joints indicated below.
   2. Interior Joints: Do not seal interior joints unless specifically indicated to be sealed. Interior joints to be sealed include, but are not limited to, the following items.
      a. Joints between door, window, and other frames and adjacent construction.
      b. Other joints indicated below.
   3. Do not seal the following types of joints.
      a. Joints indicated to be treated with manufactured expansion joint cover or some other type of sealing device.
      b. Joints where sealant is specified to be provided by manufacturer of product to be sealed.
      c. Joints where installation of sealant is specified in another section.
      d. Joints between suspended panel ceilings/grid and walls.

B. Exterior Joints: Use nonsag non-staining silicone sealant, unless otherwise indicated.
   1. Control and Expansion Joints in Concrete Paving: Self-leveling polyurethane "traffic-grade" sealant.

C. Interior Joints: Use nonsag polyurethane sealant, unless otherwise indicated.
   1. Wall and Ceiling Joints in Non-Wet Areas: Acrylic emulsion latex sealant.

2.02 NONSAG JOINT SEALANTS

A. Non-Staining Silicone Sealant: ASTM C920, Grade NS, Uses M and A; not expected to withstand continuous water immersion or traffic.
   1. Movement Capability: Plus and minus 50 percent, minimum.
   2. Non-Staining To Porous Stone: Non-staining to light-colored natural stone when tested in accordance with ASTM C1248.
   3. Dirt Pick-Up: Reduced dirt pick-up compared to other silicone sealants.

B. Polyurethane Sealant: ASTM C920, Grade NS, Uses M and A; single or multicomponent; not expected to withstand continuous water immersion or traffic.
   1. Movement Capability: Plus and minus 25 percent, minimum.

C. Acrylic Emulsion Latex: Water-based; ASTM C834, single component, non-staining, non-bleeding, non-sagging; not intended for exterior use.

2.03 SELF-LEVELING SEALANTS

A. Self-Leveling Polyurethane Sealant: ASTM C920, Grade P, Uses M and A; single or multicomponent; explicitly approved by manufacturer for traffic exposure; not expected to withstand continuous water immersion .

1. Movement Capability: Plus and minus 25 percent, minimum.

2.04 ACCESSORIES

A. Backer Rod: Cylindrical cellular foam rod with surface that sealant will not adhere to, compatible with specific sealant used, and recommended by backing and sealant manufacturers for specific application.

PART 3 EXECUTION

3.01 INSTALLATION

A. Perform work in accordance with sealant manufacturer's requirements for preparation of surfaces and material installation instructions.

B. Perform installation in accordance with ASTM C1193.

C. Install bond breaker backing tape where backer rod cannot be used.

D. Install sealant free of air pockets, foreign embedded matter, ridges, and sags, and without getting sealant on adjacent surfaces.

E. Nonsag Sealants: Tool surface concave, unless otherwise indicated; remove masking tape immediately after tooling sealant surface.

F. Concrete Floor Joint Filler: After full cure, shave joint filler flush with top of concrete slab.

END OF SECTION

SECTION 08 1113

HOLLOW METAL DOORS AND FRAMES

PART 1 GENERAL

1.01 SUBMITTALS

A. Shop Drawings: Details of each opening, showing elevations, glazing, frame profiles, and identifying location of different finishes, if any.

PART 2 PRODUCTS

2.01 DOORS AND FRAMES

A. Requirements for All Doors and Frames:
   1. Accessibility: Comply with ICC A117.1 and ADA Standards.
   2. Door Top Closures: Flush with top of faces and edges.
   3. Door Edge Profile: Beveled on both edges.
   4. Door Texture: Smooth faces.
   5. Hardware Preparation: In accordance with BHMA A156.115, with reinforcement welded in place, in addition to other requirements specified in door grade standard.
   6. Finish: Factory primed, for field finishing.

B. Combined Requirements: If a particular door and frame unit is indicated to comply with more than one type of requirement, comply with all the specified requirements for each type; for instance, an exterior door that is also indicated as being sound-rated must comply with the requirements specified for exterior doors and for sound-rated doors; where two requirements conflict, comply with the most stringent.

2.02 STEEL DOORS

A. Exterior Doors:
   1. Grade: ANSI/SDI A250.8 (SDI-100); Level 2 - Heavy-Duty, Physical Performance Level B, Model 2 - Seamless.
   2. Galvanizing: Components hot-dipped zinc-iron alloy-coated (galvannealed) in accordance with ASTM A653/A653M, with manufacturer's standard coating thickness.
   3. Insulating Value: U-value of 0.50, when tested in accordance with ASTM C1363.

B. Interior Doors, Non-Fire-Rated:
   1. Grade: ANSI/SDI A250.8 (SDI-100); Level 1 - Standard-Duty, Physical Performance Level C, Model 1 - Full Flush.

C. Interior Doors, Fire-Rated:
   1. Grade: ANSI/SDI A250.8 (SDI-100); Level 1 - Standard-Duty, Physical Performance Level C, Model 1 - Full Flush.
   2. Fire Rating: As indicated on Door and Frame Schedule, tested in accordance with UL 10C ("positive pressure").
      a. Provide units listed and labeled by UL (Underwriters Laboratories) - UL (BMD).
      b. Attach fire rating label to each fire rated unit.

2.03 STEEL FRAMES

A. General:
   1. Comply with the requirements of grade specified for corresponding door.

B. Exterior Door Frames: Face welded, seamless with joints filled.
   1. Weatherstripping: Separate, see Section 08 7100.

C. Interior Door Frames, Non-Fire-Rated: Knockdown type.

D. Interior Door Frames, Fire-Rated: Knockdown type.
   1. Fire Rating: Same as door, labeled.

END OF SECTION

SECTION 08 3613
SECTIONAL DOORS

PART 1 GENERAL

1.01 SUBMITTALS

A. Shop Drawings: Indicate opening dimensions and required tolerances, connection details, anchorage spacing, hardware locations, and installation details.

B. Product Data: Show component construction, anchorage method, and hardware.

PART 2 PRODUCTS

2.01 STEEL DOOR COMPONENTS

A. Steel Doors: Flush steel, insulated; roof pitch track operating style with track and hardware; complying with DASMA 102, Commercial application.
   1. Door Nominal Thickness: 2 inches thick.

B. Steel Doors:
   1. Product and manufacturer: Entrematic Model 2700.
   2. Contact Custom Overhead Doors, 2203 Lawrence Blvd, Alamogordo, NM 88310, 575-434-2873 (Quote #263)

2.02 ELECTRICAL OPERATION

A. Operator, Controls, Actuators, and Safeties: Comply with UL 325; provide products listed by a testing agency acceptable to authorities having jurisdiction.

B. Safety Edge: At bottom of door panel.

C. Control Station: Standard three button (open-close-stop) momentary type control for each electric operator.

PART 3 EXECUTION

3.01 INSTALLATION

A. Install door unit assembly in accordance with manufacturer's instructions.

B. Anchor assembly to wall construction and building framing without distortion or stress.

C. Securely brace door tracks suspended from structure. Secure tracks to structural members only.

D. Coordinate installation of electrical service. Complete power and control wiring from disconnect to unit components.

END OF SECTION

SECTION 08 7100

DOOR HARDWARE

PART 1 GENERAL

1.01 ADMINISTRATIVE REQUIREMENTS

A. Furnish templates for door and frame preparation to manufacturers and fabricators of products requiring internal reinforcement for door hardware.

B. Convey Owner's keying requirements to manufacturers.

1.02 SUBMITTALS

A. Product Data: Manufacturer's catalog literature for each type of hardware, marked to clearly show products to be furnished for this project.

B. Hardware Schedule: Detailed listing of each item of hardware to be installed on each door. Use door numbering scheme as included in the Contract Documents. Identify electrically operated items and include power requirements.

C. Maintenance Data: Include data on operating hardware, lubrication requirements, and inspection procedures related to preventative maintenance.

1.03 QUALITY ASSURANCE

PART 2 PRODUCTS

2.01 DOOR HARDWARE - GENERAL

A. Provide hardware specified or required to make doors fully functional, compliant with applicable codes, and secure to the extent indicated.

B. Provide products that comply with the following:
   1. Applicable provisions of federal, state, and local codes.
   2. Fire-Rated Doors: NFPA 80.
   3. Hardware on Fire-Rated Doors, Except Hinges: Listed and classified by UL as suitable for the purpose specified and indicated.
   4. Products Requiring Electrical Connection: Listed and classified by UL as suitable for the purpose specified and indicated.

C. Electrically Operated and/or Controlled Hardware: Provide all power supplies, power transfer hinges, relays, and interfaces required for proper operation; provide wiring between hardware and control components and to building power connection.

D. Finishes: Provide door hardware of the same finish unless otherwise indicated.
   1. Primary Finish: Satin chrome plated over nickel on brass or bronze, 626 (approx US26D).
   2. Finish Definitions: BHMA A156.18.
   3. Exceptions:
      a. Where base metal is specified to be different, provide finish that is an appearance equivalent according to BHMA A156.18.

2.02 LOCKS AND LATCHES

A. Locks: Provide a lock for every door, unless specifically indicated as not requiring locking.
   1. If no hardware set is indicated for a swinging door provide an office lockset.
   2. Trim: Provide lever handle or pull trim on outside of all locks unless specifically stated to have no outside trim.
   3. Lock Cylinders: Provide key access on outside of all locks unless specifically stated to have no locking or no outside trim.

B. Lock Cylinders: Manufacturer’s standard tumbler type, six-pin standard core.

C. Keying: Grand master keyed.

D. Latches: Provide a latch for every door that is not required to lock, unless specifically indicated "push/pull" or "not required to latch".

2.03 HINGES

A. Hinges: Provide hinges on every swinging door.
   1. Provide five-knuckle full mortise butt hinges unless otherwise indicated.
   2. Provide ball-bearing hinges at all doors having closers.
   3. Provide hinges in the quantities indicated.
   4. Provide non-removable pins on exterior outswinging doors.
   5. Where electrified hardware is mounted in door leaf, provide power transfer hinges.

B. Butt Hinges: Comply with BHMA A156.1 and A156.7; heavy weight, unless otherwise indicated.

2.04 PUSH/PULLS

A. Push/Pulls: Comply with BHMA A156.6.
   1. Provide push and pull on doors not specified to have lockset, latchset, exit device, or auxiliary lock.
   2. On solid doors, provide matching push plate and pull plate on opposite faces.

2.05 CYLINDRICAL LOCKSETS

A. Locking Functions: As defined in BHMA A156.2, and as follows.
   1. Passage: No locking, always free entry and exit.
   2. Privacy: F76, emergency tool unlocks.
   3. Classroom: F84, key required to lock.
   4. Always-Locked: F86, key required to lock, may not be left unlocked.

2.06 EXIT DEVICES

A. Locking Functions: Functions as defined in BHMA A156.3, and as follows:
   1. Entry/Exit, Free Swing: Key outside retracts latch, latch holdback (dogging) for free swing during occupied hours, not fire-rated; outside trim must be specified as lever or pull.

2.07 CLOSERS

A. Closers: Complying with BHMA A156.4.
   1. Provide a door closer on every exterior door.
   2. Provide a door closer on every fire- and smoke-rated door. Spring hinges are not an acceptable self-closing device unless specifically so indicated.
   3. On pairs of swinging doors, if an overlapping astragal is present, provide coordinator to ensure the leaves close in proper order.
   4. At outswinging exterior doors, mount closer in inside of door.

2.08 STOPS AND HOLDERS

A. Stops: Complying with BHMA A156.8; provide a stop for every swinging door, unless otherwise indicated.
   1. Provide wall stops, unless otherwise indicated.
   2. If wall stops are not practical, due to configuration of room or furnishings, provide overhead stop.
   3. Stop is not required if positive stop feature is specified for door closer; positive stop feature of door closer is not an acceptable substitute for a stop unless specifically so stated.

2.09 GASKETING AND THRESHOLDS

A. Gaskets: Complying with BHMA A156.22.
   1. On each door in smoke partition, provide smoke gaskets; top, sides, and meeting stile of pairs. If fire/smoke partitions are not indicated on drawings, provide smoke gaskets on each door identified as a "smoke door" and 20-minute rated fire doors.
   2. On each exterior door, provide weatherstripping gaskets, unless otherwise indicated; top, sides, and meeting stiles of pairs.
      a. Where exterior door is also required to have fire or smoke rating, provide gaskets functioning as both smoke and weather seals.

3. On each exterior door, provide door bottom sweep, unless otherwise indicated.

B. Thresholds: Complying with BHMA A156.21.

1. At each exterior door, provide a threshold unless otherwise indicated.

2.10 PROTECTION PLATES AND ARCHITECTURAL TRIM

A. Protection Plates:

1. Kickplate: Provide on push side of every door with closer, except aluminum storefront and glass entry doors.

B. Drip Guard: Provide projecting drip guard over all exterior doors unless they are under a projecting roof or canopy.

PART 3 EXECUTION

3.01 INSTALLATION

A. Install hardware in accordance with manufacturer's instructions and applicable codes.

B. Use templates provided by hardware item manufacturer.

C. Install hardware on fire-rated doors and frames in accordance with code and NFPA 80.

3.02 ADJUSTING

A. Adjust hardware for smooth operation.

3.03 SCHEDULE - ATTACHED.

HARDWARE SETS

4.01 HARDWARE SETS - GENERAL

A. These Hardware Sets indicate requirements for single doors of that type, with conditional requirements for pairs and other situations.

B. Pairs of Swinging Doors: Provide one of each specified item on each leaf unless specifically stated otherwise. Treat pairs as two active leaves unless otherwise indicated.

END OF SECTION

DOOR SCHEDULE:

HW-1.0 (Existing Entry Door 101)

1	Exit Device (rim, classroom)
1	Interchangeable Core
1	Rim Cylinder
1	Closer (surface)
1	Threshold
1	Gasketing
1	Sweep

HW-2.0 (Door 109)

3	Hinge (Heavy Duty)
1	Cylindrical Lock (storeroom)
1	Wall Stop
3	Silencer
1	Kickplate

HW-3.0 (Door 103, 104, 106, 107, 108)

3	Hinge (Heavy Duty)
1	Cylindrical Lock (classroom)
1	Wall Stop
3	Silencer
1	Gasketing

HW-4.0 (Doors 103B, 104B, 116A)

3	Hinge (Heavy Duty)
1	Exit Device (rim, classroom)
1	Interchangeable Core
1	Rim Cylinder
1	Closer (surface)
1	Threshold
1	Gasketing
1	Sweep

HW-5.0 (Doors 105A, 105B)

3	Hinge (Heavy Duty)
1	Cylindrical Lock (classroom)
1	Closer (surface)
1	Threshold
1	Gasketing
1	Sweep

HW-6.0 (Door 110)

3	Hinge (Heavy Duty)
1	Cylindrical Lock (privacy)
1	Wall Stop
3	Silencer

HW-7.0 (Doors 111, 112)

3	Hinge (Heavy Duty)
1	Push Plate
1	Pull Plate
1	Closer (surface)
1	Kick Plate
1	Mop Plate
1	Wall Stop
3	Silencer

HW-8.0 (Doors 114A, 115A)

6	Hinge (Heavy Duty)
1	Removable Mullion
2	Exit Device (rim, classroom)
2	Interchangeable Core
1	Cylinder
2	Rim Cylinder
2	Surface Overhead Stop
2	Closer (surface)
2	Kick Plate
2	Gasketing

HW-9.0 (Doors 114B, 115B)

6	Hinge	(Heavy Duty)
1	Removable Mullion	
2	Exit Device (rim, classroom)	
2	Interchangeable Core	
1	Cylinder	
2	Rim Cylinder	
2	Surface Overhead Stop	
2	Closer (surface)	
2	Kick Plate	
2	Gasketing	

SECTION 09 2116
GYPSUM BOARD ASSEMBLIES

PART 1 GENERAL

1.01 SUBMITTALS

A. Product Data: Provide data on metal framing, gypsum board, accessories, and joint finishing system.

PART 2 PRODUCTS

2.01 GYPSUM BOARD ASSEMBLIES

A. Provide completed assemblies complying with ASTM C840 and GA-216.

B. Interior Partitions, Indicated as Acoustic: Provide completed assemblies with the following characteristics:
   1. Acoustic Attenuation: STC of 45-49 calculated in accordance with ASTM E413, based on tests conducted in accordance with ASTM E90.

2.02 METAL FRAMING MATERIALS

A. Non-Loadbearing Framing System Components: ASTM C645; galvanized sheet steel, of size and properties necessary to comply with ASTM C754 for the spacing indicated, with maximum deflection of wall framing of L/240 at 5 psf.
   1. Studs: "C" shaped with flat or formed webs with knurled faces.
   2. Runners: U shaped, sized to match studs.

B. Partition Head To Structure Connections: Provide track fastened to structure with legs of sufficient length to accommodate deflection, for friction fit of studs cut short and fastened as indicated on drawings.

2.03 BOARD MATERIALS

A. Gypsum Wallboard: Paper-faced gypsum panels as defined in ASTM C1396/C1396M; sizes to minimize joints in place; ends square cut.
   1. Application: Use for vertical surfaces and ceilings, unless otherwise indicated.
   2. Thickness:
      a. Vertical Surfaces: 5/8 inch.
      b. Ceilings: 1/2 inch.

B. Backing Board For Wet Areas: One of the following products:
   1. Application: Surfaces behind tile in wet areas including tub and shower surrounds, shower ceilings, and toilet fixtures.
   2. Mold Resistance: Score of 10, when tested in accordance with ASTM D3273.
   3. Glass Mat Faced Board: Coated glass mat water-resistant gypsum backing panel as defined in ASTM C1178/C1178M.

C. Ceiling Board: Special sag resistant gypsum ceiling board as defined in ASTM C1396/C1396M; sizes to minimize joints in place; ends square cut.
   1. Application: Ceilings, unless otherwise indicated.
   2. Thickness: 1/2 inch.
   3. Edges: Tapered.

2.04 ACCESSORIES

A. Acoustic Insulation: ASTM C665; preformed glass fiber, friction fit type, unfaced. Thickness: 3-1/2 inch.

B. Acoustic Sealant: Acrylic emulsion latex or water-based elastomeric sealant; do not use solvent-based non-curing butyl sealant.

C. Beads, Joint Accessories, and Other Trim: ASTM C1047, rigid plastic, galvanized steel, or rolled zinc, unless noted otherwise.

D. Joint Materials: ASTM C475 and as recommended by gypsum board manufacturer for project conditions.

E. Screws for Attachment to Steel Members Less Than 0.033 inch In Thickness, to Wood Members, and to Gypsum Board: ASTM C1002; self-piercing tapping type; cadmium plated for exterior locations.

F. Screws for Attachment to Steel Members From 0.033 to 0.112 inch in Thickness: ASTM C954; steel drill screws for application of gypsum board to loadbearing steel studs.

PART 3 EXECUTION

3.01 FRAMING INSTALLATION

A. Metal Framing: Install in accordance with ASTM C754 and manufacturer's instructions.

3.02 ACOUSTIC ACCESSORIES INSTALLATION

A. Acoustic Insulation: Place tightly within spaces, around cut openings, behind and around electrical and mechanical items within partitions, and tight to items passing through partitions.

3.03 BOARD INSTALLATION

A. Comply with ASTM C 840, GA-216, and manufacturer's instructions. Install to minimize butt end joints, especially in highly visible locations.

3.04 JOINT TREATMENT

A. Finish gypsum board in accordance with levels defined in ASTM C840, as follows:
   1. Level 3: Walls to receive textured wall finish.

3.05 TEXTURE FINISH

A. Apply finish texture coating by means of spraying apparatus in accordance with manufacturer's instructions .

END OF SECTION

SECTION 09 5100
ACOUSTICAL CEILINGS

PART 1 GENERAL

1.01 SUBMITTALS

A. Shop Drawings: Indicate grid layout and related dimensioning.

B. Product Data: Provide data on suspension system components.

PART 2 PRODUCTS

2.01 ACOUSTICAL UNITS

A. Acoustical Units - General: ASTM E1264, Class A.

B. Acoustical Tile: Painted mineral fiber, ASTM E1264 Type III, with the following characteristics:
   1. Size: 24 by 48 inches.
   2. Thickness: 3/4 inches.
   3. Composition: Wet felted.
   4. Edge: Square.
   5. Surface Color: White.
   6. Surface Pattern: Perforated, regularly spaced large holes.
   7. Suspension System: Exposed grid.

2.02 SUSPENSION SYSTEM(S)

A. Suspension Systems - General: Complying with ASTM C635/C635M; die cut and interlocking components, with stabilizer bars, clips, splices, perimeter moldings, and hold down clips as required.

B. Exposed Steel Suspension System Type ____: Formed steel, commercial quality cold rolled; heavy-duty.
   1. Profile: Tee; 15/16 inch wide face.
   2. Finish: White painted.

2.03 ACCESSORIES

A. Support Channels and Hangers: Galvanized steel; size and type to suit application, seismic requirements, and ceiling system flatness requirement specified.

B. Perimeter Moldings: Same material and finish as grid.

PART 3 EXECUTION

3.01 INSTALLATION - SUSPENSION SYSTEM

A. Install suspension system in accordance with ASTM C636/C636M, ASTM E580/E580M, and manufacturer's instructions and as supplemented in this section.

B. Lay out system to a balanced grid design with edge units no less than 50 percent of acoustical unit size.

3.02 INSTALLATION - ACOUSTICAL UNITS

A. Install acoustical units in accordance with manufacturer's instructions.

B. Fit acoustical units in place, free from damaged edges or other defects detrimental to appearance and function.

END OF SECTION

SECTION 09 6500
RESILIENT FLOORING

PART 1 GENERAL

PART 2 PRODUCTS

2.01 RESILIENT BASE

A. Resilient Base: ASTM F1861, Type TS rubber, vulcanized thermoset; top set Style B, Cove.
   1. Height: 4 inch.
   2. Thickness: 0.125 inch thick.
   3. Finish: Satin.
   4. Color: Color as selected from manufacturer's standards.

PART 3 EXECUTION

3.01 INSTALLATION

A. Install in accordance with manufacturer's instructions.

B. Spread only enough adhesive to permit installation of materials before initial set.

C. Fit joints tightly.

D. Set flooring in place, press with heavy roller to attain full adhesion.

3.02 RESILIENT BASE

A. Fit joints tightly and make vertical. Maintain minimum dimension of 18 inches between joints.

END OF SECTION

SECTION 09 9000

PAINTING AND COATING

PART 2 PRODUCTS

1.01 MANUFACTURERS

A. Provide all paint and coating products used in any individual system from the same manufacturer; no exceptions.

1.02 PAINTS AND COATINGS - GENERAL

A. Paints and Coatings: Ready mixed, unless intended to be a field-catalyzed coating.
   1. Supply each coating material in quantity required to complete entire project's work from a single production run.
   2. Do not reduce, thin, or dilute coatings or add materials to coatings unless such procedure is specifically described in manufacturer's product instructions.

B. Volatile Organic Compound (VOC) Content:
   1. Provide coatings that comply with the most stringent requirements specified in the following:
      a. 40 CFR 59, Subpart D--National Volatile Organic Compound Emission Standards for Architectural Coatings.
   2. Determination of VOC Content: Testing and calculation in accordance with 40 CFR 59, Subpart D (EPA Method 24), exclusive of colorants added to a tint base and water added at project site; or other method acceptable to authorities having jurisdiction.

1.03 PAINT STYSTEMS - INTERIOR

A. Paint I-OP-FL - Concrete Floors Indicated to be painted.
   1. Two top coats and one coat primer.
      a. Primer: Corotech V155 100% Solids Epoxy Pre-Prime.
      b. Finish: Corotech V400 Epoxy Gloss/Semi-gloss Epoxy Finish (2 coats).

A. Paint MI-OP-3AC-1: Ferrous Metals, Primed or Previously Painted, 3 Coats:
   1. One coat of primer sealer:
      a. Product and manufacturer: P06 Super Spec HP Alkyd Metal Primer, 1.1 dry mils per coat, Benjamin Moore: www.benjaminmoore.com or approved equal.
   2. Gloss Enamel: Two coats of acrylic enamel.
      a. Product and manufacturer: Ultra Spec #HP28 D.T.M. Acrylic Gloss Enamel. 1.5 dry mils per coat, Benjamin Moore: www.benjaminmoore.com or approved equal.

A. Paint GI-OP-3LA - Gypsum Board/Plaster, Latex-Acrylic, 3 Coat:
   1. Two top coats and one coat primer.
      a. One coat of latex primer sealer; Ultra Spec 500 series #N534
      b. Semi-gloss: Two coats of latex-acrylic enamel; Ultra Spec 500 series #N539.

PART 3 EXECUTION

2.01 PREPARATION

A. Clean surfaces thoroughly and correct defects prior to coating application.

B. Prepare surfaces using the methods recommended by the manufacturer for achieving the best result for the substrate under the project conditions.

2.02 APPLICATION

A. Apply products in accordance with manufacturer's instructions.

B. Do not apply finishes to surfaces that are not dry. Allow applied coats to dry before next coat is applied.

C. Vacuum clean surfaces of loose particles. Use tack cloth to remove dust and particles just prior to applying next coat.

D. Reinstall electrical cover plates, hardware, light fixture trim, escutcheons, and fittings removed prior to finishing.

END OF SECTION

SECTION 10 1400
SIGNAGE

PART 1 GENERAL

1.01 SUBMITTALS

A. Product Data: Manufacturer's printed product literature for each type of sign, indicating sign styles, font, foreground and background colors, locations, overall dimensions of each sign.

B. Signage Schedule: Provide information sufficient to completely define each sign for fabrication, including room number, room name, other text to be applied, sign and letter sizes, fonts, and colors.

PART 2 PRODUCTS

2.01 SIGNAGE APPLICATIONS

A. Accessibility Compliance: Signs are required to comply with ADA Standards and ICC A117.1 and applicable building codes, unless otherwise indicated; in the event of conflicting requirements, comply with the most comprehensive and specific requirements.

2.02 SIGN TYPES

A. Flat Signs: Signage media without frame.
   1. Edges: Square.
   2. Corners: Square.
   3. Wall Mounting of One-Sided Signs: Tape adhesive.

B. Color and Font: Unless otherwise indicated:
   1. Character Font: Helvetica, Arial, or other sans serif font.
   2. Character Case: Upper case only.
   3. Background Color: Clear.
   4. Character Color: Contrasting color.

2.03 ACCESSORIES

A. Tape Adhesive: Double sided tape, permanent adhesive.

PART 3 EXECUTION

3.01 INSTALLATION

A. Install in accordance with manufacturer's instructions.

B. Install neatly, with horizontal edges level.

END OF SECTION

SECTION 10 2800

TOILET, BATH, AND LAUNDRY ACCESSORIES

PART 1 GENERAL

1.01 SUBMITTALS

A. Product Data: Submit data on accessories describing size, finish, details of function, and attachment methods.

PART 2 PRODUCTS

2.01 MANUFACTURERS

A. All items of each type to be made by the same manufacturer.

2.02 TOILET ROOM ACCESSORIES

A. Toilet Paper Dispenser: Single roll, surface mounted bracket type, chrome-plated zinc alloy brackets, spindleless type for tension spring delivery designed to prevent theft of tissue roll.

B. Paper Towel Dispenser: Folded paper type, stainless steel, semi-recessed, with viewing slots on sides as refill indicator and tumbler lock.

C. Soap Dispenser: Liquid soap dispenser, wall-mounted, surface, with plastic cover and horizontal stainless steel tank and working parts; push type soap valve, check valve, and window gage refill indicator, tumbler lock.

D. Mirrors: Stainless steel framed, 1/4 inch thick annealed float glass; ASTM C1036.
   1. Annealed Float Glass: Silvering, protective and physical characteristics in compliance with ASTM C1503.

E. Grab Bars: Stainless steel, nonslip grasping surface finish.
   1. Standard Duty Grab Bars:
      a. Push/Pull Point Load: 250 pound-force, minimum.
      b. Dimensions: 1-1/4 inch outside diameter, minimum 0.05 inch wall thickness, exposed flange mounting, 1-1/2 inch clearance between wall and inside of grab bar.
      c. Length and Configuration: As indicated on drawings.

2.03 UTILITY ROOM ACCESSORIES

A. Mop and Broom Holder: 0.05 inch thick stainless steel, Type 304, hat-shaped channel.

PART 3 EXECUTION

3.01 INSTALLATION

A. Install plumb and level, securely and rigidly anchored to substrate.

B. Mounting Heights: As required by accessibility regulations, unless otherwise indicated.

END OF SECTION

SECTION 10 4400

FIRE PROTECTION SPECIALTIES

PART 1 GENERAL

1.01 SUBMITTALS

A. Product Data: Provide extinguisher operational features.

PART 2 PRODUCTS

2.01 FIRE EXTINGUISHERS

A. Fire Extinguishers - General: Comply with product requirements of NFPA 10 and applicable codes, whichever is more stringent.

B. Dry Chemical Type Fire Extinguishers: Carbon steel tank, with pressure gage.
   1. Class: A:B:C.
   2. Size: 2.5 pound.

2.02 ACCESSORIES

A. Extinguisher Brackets: Formed steel, chrome-plated.

PART 3 EXECUTION

3.01 INSTALLATION

A. Install in accordance with manufacturer's instructions.

B. Secure rigidly in place.

END OF SECTION

SECTION 12 3530
RESIDENTIAL CASEWORK

PART 1 GENERAL

1.01 SUBMITTALS

A. Product Data: Provide component dimensions and construction details.

PART 2 PRODUCTS

2.01 COMPONENTS

A. Cabinet Construction: Softwood lumber framing and particle board.

B. Countertop: Post formed plastic laminate over particle board, coved to back splash.
   1. Side Splash: Plastic laminate over particle board, square internal intersections to back splash and top surface, contoured to suit counter top profile.

C. Door and Drawer Fronts: Plastic laminate over particle board.

D. Bolts, Nuts, Washers and Screws: Of size and type to suit application.

E. Concealed Joint Fasteners: Threaded steel.

2.02 HARDWARE

A. Hardware: Manufacturer's standard.

B. Shelf Standards and Rests: Vertical steel standards with rubber button fitted steel rests.

C. Shelf Brackets: Vertical chrome steel standards with chrome steel arms.

D. Drawer and Door Pulls: Chrome wire pulls, 4 inches wide.

E. Drawer Slides: Extension arms, steel construction.

F. Hinges: Offset pin.

2.03 FABRICATION

A. Shop assemble casework for delivery to site in units easily handled and to permit passage through building openings.

B. Fabricate corners and joints without gaps or inaccessible spaces or areas where dirt or moisture could accumulate.

C. Provide cutouts for plumbing fixtures, appliances, and fixtures and fittings. Prime paint contact surfaces of cut edges.

2.04 FINISHES

A. Exposed To View Surfaces: Plastic laminate as selected by Owner.

PART 3 EXECUTION

3.01 INSTALLATION

A. Install casework, components and accessories in accordance with manufacturer's instructions.

B. Use anchoring devices to suit conditions and substrate materials encountered.

C. Set casework items plumb and square, securely anchored to building structure.

END OF SECTION

SECTION 22 0516

EXPANSION FITTINGS AND LOOPS FOR PLUMBING PIPING

PART 1 GENERAL

1.01 SECTION INCLUDES

A. Flexible pipe connectors.

1.02 RELATED REQUIREMENTS

A. Section 22 1005 - Plumbing Piping.

B. Section 23 2300 - Refrigerant Piping.

1.03 SUBMITTALS

A. See Section 01 3000 - Administrative Requirements, for submittal procedures.

B. Product Data:
   1. Flexible Pipe Connectors: Indicate maximum temperature and pressure rating, face-to-face length, live length, hose wall thickness, hose convolutions per foot and per assembly, fundamental frequency of assembly, braid structure, and total number of wires in braid.
   2. Expansion Joints: Indicate maximum temperature and pressure rating, and maximum expansion compensation.

C. Manufacturer's Instructions: Indicate manufacturer's installation instructions, special procedures, and external controls.

D. Maintenance Data: Include adjustment instructions.

1.04 REGULATORY REQUIREMENTS

A. Conform to UL requirements.

PART 2 PRODUCTS

2.01 FLEXIBLE PIPE CONNECTORS - STEEL PIPING

A. Manufacturers:
   1. Mercer Rubber Company: www.mercer-rubber.com.
   2. Metraflex Company: www.metraflex.com.
   3. Substitutions: See Section 01 6000 - Product Requirements.

B. Pressure Rating: 125 psi and 450 degrees F.

C. Size: Use pipe sized units.

D. Maximum offset: 3/4 inch on each side of installed center line.

2.02 FLEXIBLE PIPE CONNECTORS - COPPER PIPING

A. Manufacturer:
   1. Mercer Rubber Company: www.mercer-rubber.com.
   2. Metraflex Company: www.metraflex.com.
   3. Substitutions: See Section 01 6000 - Product Requirements.

B. Pressure Rating: 125 psi and 450 degrees F.

C. Maximum offset: 3/4 inch on each side of installed center line.

D. Application: Copper piping.

PART 3 EXECUTION

3.01 INSTALLATION

A. Install in accordance with manufacturer's instructions.

B. Install flexible pipe connectors on pipes connected to vibration isolated equipment. Provide line size flexible connectors.

C. Install flexible connectors at right angles to displacement. Install one end immediately adjacent to isolated equipment and anchor other end. Install in horizontal plane unless indicated otherwise.

D. Anchor pipe to building structure where indicated. Provide pipe guides so movement is directed along axis of pipe only. Erect piping such that strain and weight is not on cast connections or apparatus.

E. Provide support and equipment required to control expansion and contraction of piping. Provide loops, pipe offsets, and swing joints, or expansion joints where required.

END OF SECTION

SECTION 22 0548

VIBRATION AND SEISMIC CONTROLS FOR PLUMBING PIPING AND EQUIPMENT

PART 1 GENERAL

1.01 SECTION INCLUDES

A. Equipment support bases.

B. Vibration isolators.

C. Seismic restraints for suspended components and equipment.

1.02 RELATED REQUIREMENTS

A. Section 01 4533 - Code-Required Special Inspections: Statement of Special Inspections; additional requirements for code-required special inspections.

B. Section 03 3000 - Cast-in-Place Concrete.

1.03 REFERENCE STANDARDS

A. ASHRAE (HVACA) - ASHRAE Handbook - HVAC Applications; American Society of Heating, Refrigerating and Air-Conditioning Engineers, Inc.; 2011.

B. FEMA E-74 - Reducing the Risks of Nonstructural Earthquake Damage: A Practical Guide; 2011.

C. SMACNA (SRM) - Seismic Duct Restraint Manual; Sheet Metal and Air Conditioning Contractors' National Association; 2008.

1.04 SUBMITTALS

A. See Section 01 3000 - Administrative Requirements, for submittal procedures.

B. Product Data:
   1. Provide manufacturer's product literature documenting compliance with PART 2 PRODUCTS.

C. Manufacturer's Instructions: Indicate installation instructions with special procedures and setting dimensions.

1.05 QUALITY ASSURANCE

A. Perform design and installation in accordance with applicable codes.

B. Manufacturer Qualifications: Company specializing in manufacturing products specified in this section, with not less than three years of documented experience.

PART 2 PRODUCTS

2.01 MANUFACTURERS

A. Kinetics Noise Control, Inc: www.kineticsnoise.com.

B. Mason Industries: www.mason-ind.com.

C. Vibration Eliminator Company, Inc: www.veco-ny.com.

D. Substitutions: See Section 01 6000 - Product Requirements.

2.02 PERFORMANCE REQUIREMENTS

A. General:
   1. All vibration isolators, base frames and inertia bases to conform to all uniform deflection and stability requirements under all operating loads.
   2. Steel springs to function without undue stress or overloading.
   3. Steel springs to operate in the linear portion of the load versus deflection curve over deflection range of not less than 50 percent above specified deflection.
   4. Lateral to vertical stiffness ratio to not exceed 0.08 with spring deflection at minimum 75 percent of specified deflection.
   5. All equipment mounted on vibration isolated bases to have minimum operating clearance of 2 inches between the base and floor or support beneath unless noted otherwise.

2.03 EQUIPMENT SUPPORT BASES

2.04 VIBRATION ISOLATORS

A. Non-Seismic Type:

2.05 SEISMIC RESTRAINTS FOR SUSPENDED COMPONENTS AND EQUIPMENT

A. Comply with:
   1. ASHRAE Handbook - HVAC Applications.
   2. FEMA E-74.
   3. SMACNA (SRM).

B. Cable Restraints:
   1. Wire Rope: Steel wire strand cables sized to resist seismic loads in all lateral directions.
   2. Protective Thimbles: Eliminates potential for dynamic cable wear and strand breakage.
   3. Size: Based on the lesser of cable capacity or anchor load taking into account bracket geometry.
   4. Connections:
      a. Use overlapping wire rope U clips, cable clamping bolts, swaged sleeves or seismically rated tool-less wedge insert lock connectors.
      b. Internally brace clevis hanger bracket cross bolt to prevent deformation.
   5. Vertical Suspension Rods: Attach required bracing of sufficient strength to prevent rod buckling from vertical compression forces utilizing series of attachment clips.

C. Rigid Restraints:
   1. Structural Element: Sized to resist seismic loads in all lateral directions and carry both compressive and tensile loading.
   2. Size: Based on the lesser of cable capacity or anchor load taking into account bracket geometry.
   3. Connections: Internally brace clevis hanger bracket cross bolt to prevent deformation.
   4. Static Support System: Anchorage capable of carrying additional tension loads generated by the vertical component of the rigid brace compression which is additive to any static load requirements on the system.
   5. Vertical Suspension Rods: Attached required bracing of sufficient strength to prevent rod buckling from vertical compression forces utilizing series of attachment clips.

PART 3 EXECUTION

3.01 INSTALLATION - GENERAL

A. Install in accordance with manufacturer's instructions.

3.02 FIELD QUALITY CONTROL

A. Inspect isolated equipment after installation and submit report. Include static deflections.

END OF SECTION

SECTION 22 0553

IDENTIFICATION FOR PLUMBING PIPING AND EQUIPMENT

PART 1 GENERAL

1.01 SECTION INCLUDES

A. Nameplates.

B. Tags.

C. Stencils.

D. Pipe Markers.

1.02 RELATED REQUIREMENTS

A. Section 09 9123 - Interior Painting: Identification painting.

1.03 REFERENCE STANDARDS

A. ASME A13.1 - Scheme for the Identification of Piping Systems; The American Society of Mechanical Engineers; 2007.

B. ASTM D709 - Standard Specification for Laminated Thermosetting Materials; 2013.

1.04 SUBMITTALS

A. See Section 01 3000 - Administrative Requirements, for submittal procedures.

B. Manufacturer's Installation Instructions: Indicate special procedures, and installation.

C. Project Record Documents: Record actual locations of tagged valves.

PART 2 PRODUCTS

2.01 IDENTIFICATION APPLICATIONS

A. Air Handling Units: Nameplates.

B. Air Terminal Units: Tags.

C. Piping: Tags.

D. Small-sized Equipment: Tags.

E. Valves: Tags and ceiling tacks where located above lay-in ceiling.

2.02 NAMEPLATES

A. Manufacturers:
   1. Brimar Industries, Inc.: www.pipemarker.com.
   2. Kolbi Pipe Marker Co.: www.kolbipipemarkers.com.
   3. Seton Identification Products: www.seton.com.
   4. Substitutions: See Section 01 6000 - Product Requirements.

B. Description: Laminated three-layer plastic with engraved letters.

2.03 TAGS

A. Manufacturers:
   1. Advanced Graphic Engraving: www.advancedgraphicengraving.com.
   2. Brady Corporation: www.bradycorp.com.
   3. Brimar Industries, Inc.: www.pipemarker.com.
   4. Kolbi Pipe Marker Co.: www.kolbipipemarkers.com.
   5. Seton Identification Products: www.seton.com.
   6. Substitutions: See Section 01 6000 - Product Requirements.

B. Plastic Tags: Laminated three-layer plastic with engraved black letters on light contrasting background color. Tag size minimum 1-1/2 inch diameter.

C. Metal Tags: Brass with stamped letters; tag size minimum 1-1/2 inch diameter with smooth edges.

2.04 STENCILS

A. Manufacturers:
   1. Brady Corporation: www.bradycorp.com.
   2. Kolbi Pipe Marker Co.: www.kolbipipemarkers.com.
   3. Seton Identification Products: www.seton.com.
   4. Substitutions: See Section 01 6000 - Product Requirements.

2.05 PIPE MARKERS

2.06 CEILING TACKS

A. Manufacturers:
   1. Craftmark: www.craftmarkid.com.
   2. Substitutions: See Section 01 6000 - Product Requirements.

B. Description: Steel with 3/4 inch diameter color coded head.

PART 3 EXECUTION

3.01 PREPARATION

A. Degrease and clean surfaces to receive adhesive for identification materials.

3.02 INSTALLATION

A. Install plastic nameplates with corrosive-resistant mechanical fasteners, or adhesive. Apply with sufficient adhesive to ensure permanent adhesion and seal with clear lacquer.

B. Install tags with corrosion resistant chain.

C. Apply stencil painting in accordance with Section 09 9123.

D. Install plastic pipe markers in accordance with manufacturer's instructions.

E. Install plastic tape pipe markers complete around pipe in accordance with manufacturer's instructions.

F. Use tags on piping 3/4 inch diameter and smaller.
   1. Identify service, flow direction, and pressure.
   2. Install in clear view and align with axis of piping.
   3. Locate identification not to exceed 20 feet on straight runs including risers and drops, adjacent to each valve and Tee, at each side of penetration of structure or enclosure, and at each obstruction.

G. Locate ceiling tacks to locate valves or dampers above lay-in panel ceilings. Locate in corner of panel closest to equipment.

3.03 SCHEDULES

END OF SECTION

SECTION 22 0719
PLUMBING PIPING INSULATION

PART 1 GENERAL

1.01 SECTION INCLUDES

A. Piping insulation.

B. Jackets and accessories.

1.02 RELATED REQUIREMENTS

A. Section 22 1005 - Plumbing Piping: Placement of hangers and hanger inserts.

1.03 REFERENCE STANDARDS

A. ASTM C552 - Standard Specification for Cellular Glass Thermal Insulation; 2013.

B. ASTM C585 - Standard Practice for Inner and Outer Diameters of Rigid Thermal Insulation for Nominal Sizes of Pipe and Tubing (NPS System); 2010.

C. ASTM D1056 - Standard Specification for Flexible Cellular Materials--Sponge or Expanded Rubber; 2014.

D. ASTM E84 - Standard Test Method for Surface Burning Characteristics of Building Materials; 2014.

E. ASTM E96/E96M - Standard Test Methods for Water Vapor Transmission of Materials; 2014.

F. NFPA 255 - Standard Method of Test of Surface Burning Characteristics of Building Materials; National Fire Protection Association; 2006.

G. UL 723 - Standard for Test for Surface Burning Characteristics of Building Materials; Underwriters Laboratories Inc.; Current Edition, Including All Revisions.

1.04 SUBMITTALS

A. See Section 01 3000 - Administrative Requirements, for submittal procedures.

B. Product Data: Provide product description, thermal characteristics, list of materials and thickness for each service, and locations.

C. Manufacturer's Instructions: Indicate installation procedures that ensure acceptable workmanship and installation standards will be achieved.

1.05 QUALITY ASSURANCE

A. Manufacturer Qualifications: Company specializing in manufacturing the Products specified in this section with not less than three years of documented experience.

1.06 DELIVERY, STORAGE, AND HANDLING

A. Accept materials on site, labeled with manufacturer's identification, product density, and thickness.

1.07 FIELD CONDITIONS

A. Maintain ambient conditions required by manufacturers of each product.

B. Maintain temperature before, during, and after installation for minimum of 24 hours.

PART 2 PRODUCTS

2.01 REQUIREMENTS FOR ALL PRODUCTS OF THIS SECTION

A. Surface Burning Characteristics: Flame spread/Smoke developed index of 25/50, maximum, when tested in accordance with ASTM E84, NFPA 255, or UL 723.

2.02 GLASS FIBER

2.03 POLYETHYLENE

A. Manufacturers:
   1. Armacell LLC: www.armacell.us.

2. Substitutions: See Section 01 6000 - Product Requirements.

B. Insulation: Flexible closed-cell polyethylene tubing, slit lengthwise for installation, complying with applicable requirements of ASTM D1056.
   1. 'K' value: ASTM C177; 0.25 at 75 degrees F.
   2. Maximum Service Temperature: 200 degrees F.
   3. Density: 2 lb/cu ft.
   4. Maximum Moisture Absorption: 1.0 percent by volume.
   5. Moisture Vapor Permeability: 0.05 perm inch, when tested in accordance with ASTM E96/E96M.
   6. Connection: Contact adhesive.

2.04 JACKETS

A. PVC Plastic.
   1. Manufacturers:
      a. Johns Manville: www.jm.com.
      b. Substitutions: See Section 01 6000 - Product Requirements.
   2. Jacket: One piece molded type fitting covers and sheet material, off-white color.
      a. Minimum Service Temperature: 0 degrees F.
      b. Maximum Service Temperature: 150 degrees F.
      c. Moisture Vapor Permeability: 0.002 perm inch, maximum, when tested in accordance with ASTM E96/E96M.
      d. Thickness: 10 mil.
      e. Connections: Brush on welding adhesive.

B. ABS Plastic:
   1. Jacket: One piece molded type fitting covers and sheet material, off-white color.
      a. Minimum Service Temperature: -40 degrees F.
      b. Maximum Service Temperature of 180 degrees F.
      c. Moisture Vapor Permeability: 0.012 perm inch, when tested in accordance with ASTM E96/E96M.
      d. Thickness: 30 mil.
      e. Connections: Brush on welding adhesive.

PART 3 EXECUTION

3.01 EXAMINATION

A. Verify that piping has been tested before applying insulation materials.

B. Verify that surfaces are clean and dry, with foreign material removed.

3.02 INSTALLATION

A. Install in accordance with manufacturer's instructions.

B. Install in accordance with NAIMA National Insulation Standards.

C. Exposed Piping: Locate insulation and cover seams in least visible locations.

D. Insulated pipes conveying fluids below ambient temperature: Insulate entire system including fittings, valves, unions, flanges, strainers, flexible connections, pump bodies, and expansion joints.

E. Glass fiber insulated pipes conveying fluids below ambient temperature:
   1. Provide vapor barrier jackets, factory-applied or field-applied. Secure with self-sealing longitudinal laps and butt strips with pressure sensitive adhesive. Secure with outward clinch expanding staples and vapor barrier mastic.
   2. Insulate fittings, joints, and valves with molded insulation of like material and thickness as adjacent pipe. Finish with glass cloth and vapor barrier adhesive or PVC fitting covers.

F. For hot piping conveying fluids 140 degrees F or less, do not insulate flanges and unions at equipment, but bevel and seal ends of insulation.

G. For hot piping conveying fluids over 140 degrees F, insulate flanges and unions at equipment.

H. Continue insulation through walls, sleeves, pipe hangers, and other pipe penetrations. Finish at supports, protrusions, and interruptions. At fire separations, refer to Section 07 8400.

I. All Pipe Exposed in Mechanical Equipment Rooms or Finished Spaces. Finish with canvas jacket sized for finish painting.

J. Buried Piping: Provide factory fabricated assembly with inner all-purpose service jacket with self-sealing lap, and asphalt impregnated open mesh glass fabric, with one mil thick aluminum foil sandwiched between three layers of bituminous compound; outer surface faced with a polyester film.

END OF SECTION

SECTION 22 1005
PLUMBING PIPING

PART 1 GENERAL

1.01 SECTION INCLUDES

A. Pipe, pipe fittings, valves, and connections for piping systems.
   1. Sanitary sewer.
   2. Domestic water.
   3. Gas.

1.02 RELATED REQUIREMENTS

A. Section 08 3100 - Access Doors and Panels.

B. Section 09 9113 - Exterior Painting.

C. Section 09 9123 - Interior Painting.

D. Section 22 0516 - Expansion Fittings and Loops for Plumbing Piping.

E. Section 22 0548 - Vibration and Seismic Controls for Plumbing Piping and Equipment.

F. Section 22 0553 - Identification for Plumbing Piping and Equipment.

G. Section 22 0719 - Plumbing Piping Insulation.

1.03 SUBMITTALS

A. See Section 01 3000 - Administrative Requirements, for submittal procedures.

B. Product Data: Provide data on pipe materials, pipe fittings, valves, and accessories. Provide manufacturers catalog information. Indicate valve data and ratings.

1.04 QUALITY ASSURANCE

A. Perform work in accordance with applicable codes.

B. Valves: Manufacturer's name and pressure rating marked on valve body.

C. Welding Materials and Procedures: Conform to ASME BPVC-IX and applicable state labor regulations.

1.05 DELIVERY, STORAGE, AND HANDLING

A. Accept valves on site in shipping containers with labeling in place. Inspect for damage.

B. Provide temporary protective coating on cast iron and steel valves.

C. Provide temporary end caps and closures on piping and fittings. Maintain in place until installation.

D. Protect piping systems from entry of foreign materials by temporary covers, completing sections of the work, and isolating parts of completed system.

PART 2 PRODUCTS

2.01 GENERAL REQUIREMENTS

A. Potable Water Supply Systems: Provide piping, pipe fittings, and solder and flux (if used), that comply with NSF 61 and NSF 372 for maximum lead content; label pipe and fittings.

2.02 PROPANE GAS PIPING, ABOVE GRADE

A. Copper Tube: ASTM B88 (ASTM B88M), Type K (A) annealed.
   1. Fittings: ASME B16.26, cast bronze.
   2. Joints: Flared.

2.03 FLANGES, UNIONS, AND COUPLINGS

A. Unions for Pipe Sizes 3 Inches and Under:
   1. Ferrous pipe: Class 150 malleable iron threaded unions.
   2. Copper tube and pipe: Class 150 bronze unions with soldered joints.

B. Flanges for Pipe Size Over 1 Inch:
   1. Ferrous pipe: Class 150 malleable iron threaded or forged steel slip-on flanges; preformed neoprene gaskets.
   2. Copper tube and pipe: Class 150 slip-on bronze flanges; preformed neoprene gaskets.

2.04 PIPE HANGERS AND SUPPORTS

A. Provide hangers and supports that comply with MSS SP-58.
   1. If type of hanger or support for a particular situation is not indicated, select appropriate type using MSS SP-58 recommendations.
   2. Overhead Supports: Individual steel rod hangers attached to structure or to trapeze hangers.
   3. Trapeze Hangers: Welded steel channel frames attached to structure.
   4. Vertical Pipe Support: Steel riser clamp.

B. Plumbing Piping - Drain, Waste, and Vent:
   1. Hangers for Pipe Sizes 1/2 Inch to 1-1/2 Inches: Malleable iron, adjustable swivel, split ring.
   2. Hangers for Pipe Sizes 2 Inches and Over: Carbon steel, adjustable, clevis.
   3. Wall Support for Pipe Sizes to 3 Inches: Cast iron hook.
   4. Wall Support for Pipe Sizes 4 Inches and Over: Welded steel bracket and wrought steel clamp.
   5. Floor Support: Cast iron adjustable pipe saddle, lock nut, nipple, floor flange, and concrete pier or steel support.
   6. Copper Pipe Support: Carbon steel ring, adjustable, copper plated.

C. Plumbing Piping - Water:
   1. Hangers for Pipe Sizes 1/2 Inch to 1-1/2 Inches: Malleable iron, adjustable swivel, split ring.
   2. Hangers for Cold Pipe Sizes 2 Inches and Over: Carbon steel, adjustable, clevis.
   3. Hangers for Hot Pipe Sizes 2 Inches to 4 Inches: Carbon steel, adjustable, clevis.
   4. Wall Support for Pipe Sizes to 3 Inches: Cast iron hook.

D. Hanger Fasteners: Attach hangers to structure using appropriate fasteners, as follows:
   1. Concrete Adhesive Type Anchors: Complying with ICC-ES AC308.
   2. Other Types: As required.
   3. Manufacturers:
      a. Substitutions: See Section 01 6000 - Product Requirements.

2.05 GATE VALVES

A. Manufacturers:
   1. Conbraco Industries: www.apollovalves.com.
   2. Nibco, Inc: www.nibco.com.
   3. Milwaukee Valve Company: www.milwaukeevalve.com.
   4. Substitutions: See Section 01 6000 - Product Requirements.

B. Up To and Including 3 Inches:
   1. MSS SP-80, Class 125, bronze body, bronze trim, rising stem, handwheel, inside screw, solid wedge disc, solder ends.

2.06 BALL VALVES

A. Manufacturers:
   1. Conbraco Industries: www.apollovalves.com.
   2. Grinnell Products, a Tyco Business: www.grinnell.com.
   3. Shurjoint Piping Products, Inc., a Tyco Business: www.shurjoint.com.
   4. Nibco, Inc: www.nibco.com.
   5. Milwaukee Valve Company: www.milwaukeevalve.com.
   6. Substitutions: See Section 01 6000 - Product Requirements.

2.07 SWING CHECK VALVES

A. Manufacturers:
   1. Hammond Valve: www.hammondvalve.com.
   2. Nibco, Inc: www.nibco.com.
   3. Milwaukee Valve Company: www.milwaukeevalve.com.
   4. Substitutions: See Section 01 6000 - Product Requirements.

B. Up to 2 Inches:
   1. MSS SP-80, Class 125, bronze body and cap, bronze swing disc with rubber seat, solder ends.

2.08 SPRING LOADED CHECK VALVES

A. Manufacturers:
   1. Hammond Valve: www.hammondvalve.com.
   2. Crane Co.: www.cranevalve.com.
   3. Milwaukee Valve Company: www.milwaukeevalve.com.
   4. Substitutions: See Section 01 6000 - Product Requirements.

B. Class 125, iron body, bronze trim, stainless steel springs, bronze disc, Buna N seals, wafer style ends.

2.09 WATER PRESSURE REDUCING VALVES

A. Manufacturers:
   1. Amtrol Inc: www.amtrol.com.
   2. Cla-Val Co: www.cla-val.com.
   3. Watts Regulator Company: www.wattsregulator.com.
   4. Substitutions: See Section 01 6000 - Product Requirements.

B. Up to 2 Inches:
   1. ASSE 1003, bronze body, stainless steel, and thermoplastic internal parts, fabric reinforced diaphragm, strainer, threaded single union ends.

2.10 RELIEF VALVES

A. Pressure Relief:
   1. Manufacturers:
      a. Cla-Val Co: www.cla-val.com.
      b. Henry Technologies: www.henrytech.com.
      c. Watts Regulator Company: www.wattsregulator.com.
      d. Substitutions: See Section 01 6000 - Product Requirements.
   2. AGA Z21.22 certified, bronze body, teflon seat, steel stem and springs, automatic, direct pressure actuated.

B. Temperature and Pressure Relief:
   1. Manufacturers:
      a. Cla-Val Co: www.cla-val.com.
      b. Henry Technologies: www.henrytech.com.
      c. Watts Regulator Company: www.wattsregulator.com.
      d. Substitutions: See Section 01 6000 - Product Requirements.
   2. AGA Z21.22 certified, bronze body, teflon seat, stainless steel stem and springs, automatic, direct pressure actuated, temperature relief maximum 210 degrees F, capacity ASME BPVC-IV certified and labelled.

2.11 STRAINERS

A. Manufacturers:
   1. Armstrong International, Inc: www.armstronginternational.com.
   2. Green Country Filter Manufacturing: www.greencountryfilter.com.
   3. WEAMCO: www.weamco.com.
   4. Substitutions: See Section 01 6000 - Product Requirements.

B. Size 2 inch and Under:
   1. Threaded brass body for 175 psi CWP, Y pattern with 1/32 inch stainless steel perforated screen.
   2. Class 150, threaded bronze body 300 psi CWP, Y pattern with 1/32 inch stainless steel perforated screen.

C. Size 1-1/2 inch to 4 inch:
   1. Class 125, flanged iron body, Y pattern with 1/16 inch stainless steel perforated screen.

PART 3 EXECUTION

3.01 EXAMINATION

A. Verify that excavations are to required grade, dry, and not over-excavated.

3.02 PREPARATION

A. Ream pipe and tube ends. Remove burrs. Bevel plain end ferrous pipe.

B. Remove scale and dirt, on inside and outside, before assembly.

C. Prepare piping connections to equipment with flanges or unions.

3.03 INSTALLATION

A. Install in accordance with manufacturer's instructions.

B. Provide non-conducting dielectric connections wherever jointing dissimilar metals.

C. Route piping in orderly manner and maintain gradient. Route parallel and perpendicular to walls.

D. Install piping to maintain headroom, conserve space, and not interfere with use of space.

E. Group piping whenever practical at common elevations.

F. Install piping to allow for expansion and contraction without stressing pipe, joints, or connected equipment. Refer to Section 22 0516.

G. Provide clearance in hangers and from structure and other equipment for installation of insulation and access to valves and fittings. Refer to Section 22 0719.

H. Provide access where valves and fittings are not exposed. Coordinate size and location of access doors with Section 08 3100.

I. Where pipe support members are welded to structural building framing, scrape, brush clean, and apply one coat of zinc rich primer to welding.

J. Provide support for utility meters in accordance with requirements of utility companies.

K. Prepare exposed, unfinished pipe, fittings, supports, and accessories ready for finish painting.

L. Install valves with stems upright or horizontal, not inverted.

M. Pipe vents from gas pressure reducing valves to outdoors and terminate in weather proof hood.

N. Install water piping to ASME B31.9.

O. Copper Pipe and Tube: Make soldered joints in accordance with ASTM B828, using specified solder, and flux meeting ASTM B813; in potable water systems use flux also complying with NSF 61 and NSF 372.

P. PVC Pipe: Make solvent-welded joints in accordance with ASTM D2855.

Q. Sleeve pipes passing through partitions, walls and floors.

R. Inserts:
   1. Provide inserts for suspending hangers from reinforced concrete slabs and sides of reinforced concrete beams.

S. Pipe Hangers and Supports:
   1. Install in accordance with ASME B31.9.
   2. Support horizontal piping as scheduled.

3. Install hangers to provide minimum 1/2 inch space between finished covering and adjacent work.
4. Place hangers within 12 inches of each horizontal elbow.
5. Use hangers with 1-1/2 inch minimum vertical adjustment. Design hangers for pipe movement without disengagement of supported pipe.
6. Support vertical piping at every other floor. Support riser piping independently of connected horizontal piping.
7. Where several pipes can be installed in parallel and at same elevation, provide multiple or trapeze hangers.
8. Provide copper plated hangers and supports for copper piping.
9. Prime coat exposed steel hangers and supports. Hangers and supports located in crawl spaces, pipe shafts, and suspended ceiling spaces are not considered exposed.
10. Provide hangers adjacent to motor driven equipment with vibration isolation; refer to Section 22 0548.

3.04 APPLICATION

A. Install unions downstream of valves and at equipment or apparatus connections.

B. Install brass male adapters each side of valves in copper piped system. Solder adapters to pipe.

C. Install gate valves for shut-off and to isolate equipment, part of systems, or vertical risers.

D. Install globe valves for throttling, bypass, or manual flow control services.

E. Provide plug valves in natural gas systems for shut-off service.

3.05 TOLERANCES

A. Drainage Piping: Establish invert elevations within 1/2 inch vertically of location indicated and slope to drain at minimum of 1/4 inch per foot slope.

B. Water Piping: Slope at minimum of 1/32 inch per foot and arrange to drain at low points.

3.06 SERVICE CONNECTIONS

A. Provide new sanitary sewer services. Before commencing work check invert elevations required for sewer connections, confirm inverts and ensure that these can be properly connected with slope for drainage and cover to avoid freezing.

B. Provide new water service complete with approved reduced pressure backflow preventer and water meter with by-pass valves, pressure reducing valve, and sand strainer.
   1. Provide sleeve in wall for service main and support at wall with reinforced concrete bridge. Calk enlarged sleeve and make watertight with pliable material. Anchor service main inside to concrete wall.
   2. Provide 18 gage, 0.0478 inch galvanized sheet metal sleeve around service main to 6 inch above floor and 6 feet minimum below grade. Size for minimum of 2 inches of loose batt insulation stuffing.

C. Provide new gas service complete with gas meter and regulators. Gas service distribution piping to have initial minimum pressure of 7 inch wg. Provide regulators on each line serving gravity type appliances, sized in accordance with equipment.

3.07 SCHEDULES

A. Pipe Hanger Spacing:
   1. Metal Piping:
      a. Pipe size: 1/2 inches to 1-1/4 inches:
         1) Maximum hanger spacing: 6.5 ft.
         2) Hanger rod diameter: 3/8 inches.
      b. Pipe size: 1-1/2 inches to 2 inches:
         1) Maximum hanger spacing: 10 ft.
         2) Hanger rod diameter: 3/8 inch.
      c. Pipe size: 2-1/2 inches to 3 inches:

1) Maximum hanger spacing: 10 ft.
2) Hanger rod diameter: 1/2 inch.

END OF SECTION

SECTION 22 1006
PLUMBING PIPING SPECIALTIES

PART 1 GENERAL

1.01 SECTION INCLUDES

A. Roof and floor drains.

B. Cleanouts.

C. Backflow preventers.

1.02 REFERENCE STANDARDS

A. ADA Standards - Americans with Disabilities Act (ADA) Standards for Accessible Design; 2010.

B. ASSE 1012 - Backflow Preventer with Intermediate Atmospheric Vent; American Society of Sanitary Engineering; 2009 (ANSI/ASSE 1012).

C. ASSE 1013 - Reduced Pressure Principle Backflow Preventers and Reduced Pressure Fire Protection Principle Backflow Preventers; American Society of Sanitary Engineering; 2011.

D. NSF 61 - Drinking Water System Components - Health Effects; 2012.

E. NSF 372 - Drinking Water System Components - Lead Content; 2011.

1.03 SUBMITTALS

A. See Section 01 3000 - Administrative Requirements, for submittal procedures.

B. Product Data: Provide component sizes, rough-in requirements, service sizes, and finishes.

C. Shop Drawings: Indicate dimensions, weights, and placement of openings and holes.

D. Manufacturer's Instructions: Indicate Manufacturer's Installation Instructions: Indicate assembly and support requirements.

E. Maintenance Data: Include installation instructions, spare parts lists, exploded assembly views.

1.04 QUALITY ASSURANCE

A. Manufacturer Qualifications: Company specializing in manufacturing the Products specified in this section with not less than three years documented experience.

1.05 DELIVERY, STORAGE, AND HANDLING

A. Accept specialties on site in original factory packaging. Inspect for damage.

PART 2 PRODUCTS

2.01 GENERAL REQUIREMENTS

A. Specialties in Potable Water Supply Systems: Provide products that comply with NSF 61 and NSF 372 for maximum lead content.

2.02 DRAINS

A. Manufacturers:
   1. Jay R. Smith Manufacturing Company: www.jayrsmith.com.
   2. Josam Company: www.josam.com.
   3. Zurn Industries, Inc: www.zurn.com.
   4. Substitutions: See Section 01 6000 - Product Requirements.

2.03 CLEANOUTS

A. Manufacturers:
   1. Jay R. Smith Manufacturing Company: www.jayrsmith.com.
   2. Josam Company: www.josam.com.
   3. Zurn Industries, Inc: www.zurn.com.
   4. Substitutions: See Section 01 6000 - Product Requirements.

2.04 BACKFLOW PREVENTERS

A. Manufacturers:

1. Conbraco Industries: www.apollovalves.com.
2. Watts Regulator Company: www.wattsregulator.com.
3. Zurn Industries, Inc: www.zurn.com.
4. Substitutions: See Section 01 6000 - Product Requirements.

B. Reduced Pressure Backflow Preventers:
1. ASSE 1013; bronze body with bronze internal parts and stainless steel springs; two independently operating, spring loaded check valves; diaphragm type differential pressure relief valve located between check valves; third check valve that opens under back pressure in case of diaphragm failure; non-threaded vent outlet; assembled with two gate valves, strainer, and four test cocks.

2.05 DOUBLE CHECK VALVE ASSEMBLIES

A. Manufacturers:
1. Conbraco Industries: www.apollovalves.com.
2. Watts Regulator Company: www.wattsregulator.com.
3. Zurn Industries, Inc: www.zurn.com.
4. Substitutions: See Section 01 6000 - Product Requirements.

B. Double Check Valve Assemblies:
1. ASSE 1012; Bronze body with corrosion resistant internal parts and stainless steel springs; two independently operating check valves with intermediate atmospheric vent.

PART 3 EXECUTION

3.01 INSTALLATION

A. Install in accordance with manufacturer's instructions.

B. Extend cleanouts to finished floor or wall surface. Lubricate threaded cleanout plugs with mixture of graphite and linseed oil. Ensure clearance at cleanout for rodding of drainage system.

C. Encase exterior cleanouts in concrete flush with grade.

D. Install floor cleanouts at elevation to accommodate finished floor.

E. Install approved portable water protection devices on plumbing lines where contamination of domestic water may occur; on boiler feed water lines, janitor rooms, fire sprinkler systems, premise isolation, irrigation systems, flush valves, interior and exterior hose bibbs.

F. Pipe relief from backflow preventer to nearest drain.

END OF SECTION

SECTION 22 3000
PLUMBING EQUIPMENT

PART 1 GENERAL

1.01 SECTION INCLUDES

A. Water heaters.

1.02 RELATED REQUIREMENTS

A. Section 22 0548 - Vibration and Seismic Controls for Plumbing Piping and Equipment.

B. Section 26 2717 - Equipment Wiring: Electrical characteristics and wiring connections.

1.03 REFERENCE STANDARDS

A. UL 174 - Standard for Household Electric Storage Tank Water Heaters; Underwriters Laboratories Inc.; Current Edition, Including All Revisions.

B. UL 1453 - Standard for Electric Booster and Commercial Storage Tank Water Heaters; Underwriters Laboratories Inc.; Current Edition, Including All Revisions.

1.04 SUBMITTALS

A. See Section 01 3000 - Administrative Requirements, for submittals procedures.

B. Product Data:
   1. Provide certified pump curves showing pump performance characteristics with pump and system operating point plotted. Include NPSH curve when applicable.
   2. Provide electrical characteristics and connection requirements.

C. Shop Drawings:

D. Manufacturer's Instructions:

E. Operation and Maintenance Data: Include operation, maintenance, and inspection data, replacement part numbers and availability, and service depot location and telephone number.

F. Warranty: Submit manufacturer warranty and ensure forms have been completed in Owner's name and registered with manufacturer.

1.05 QUALITY ASSURANCE

A. Manufacturer Qualifications: Company specializing in manufacturing the type of products specified in this section, with minimum three years of documented experience.

1.06 CERTIFICATIONS

A. Water Heaters: NSF approved.

B. Electric Water Heaters: UL listed and labeled to UL 174 or UL 1453.

C. Products Requiring Electrical Connection: Listed and classified by Underwriters Laboratories Inc., as suitable for the purpose specified and indicated.

1.07 DELIVERY, STORAGE, AND HANDLING

A. Provide temporary inlet and outlet caps. Maintain caps in place until installation.

1.08 WARRANTY

A. See Section 01 7800 - Closeout Submittals, for additional warranty requirements.

B. Provide five year manufacturer warranty for domestic water heaters.

PART 2 PRODUCTS

2.01 WATER HEATER MANUFACTURERS

A. A.O. Smith Water Products Co: www.hotwater.com.

B. Bock Water Heaters, Inc: www.bockwaterheaters.com.

C. Rheem Manufacturing Company: www.rheem.com.

D. Substitutions: See Section 01 6000 - Product Requirements.

2.02 COMMERCIAL ELECTRIC WATER HEATERS

A. Type: Factory-assembled and wired, electric, vertical storage.

B. Performance:

C. Electrical Characteristics:

D. Heating Elements: Flange-mounted immersion elements; individual elements sheathed with Incoloy corrosion-resistant metal alloy, rated less than 75 Watts per square inch.

PART 3 EXECUTION

3.01 INSTALLATION

A. Install plumbing equipment in accordance with manufacturer's instructions, as required by code, and complying with conditions of certification, if any.

B. Coordinate with plumbing piping and related fuel piping work to achieve operating system.

3.02 SCHEDULES

A. Water Heaters:
   1. Drawing Code:
   2. Manufacturer:
   3. Model:
   4. Input:
   5. Heating Element Size:
   6. Number of Heating Elements:
   7. Recovery:
   8. Recovery Temperature Rise:
   9. Storage Capacity:
   10. Volt/phase:

END OF SECTION

SECTION 22 4000
PLUMBING FIXTURES

PART 1 GENERAL

1.01 SECTION INCLUDES

A. Water closets.

B. Urinals.

C. Lavatories.

D. Sinks.

E. Service sinks.

F. Electric water coolers.

G. Showers.

1.02 RELATED REQUIREMENTS

A. Section 22 1005 - Plumbing Piping.

B. Section 22 1006 - Plumbing Piping Specialties.

C. Section 22 3000 - Plumbing Equipment.

D. Section 26 2717 - Equipment Wiring: Electrical characteristics and wiring connections.

1.03 REFERENCE STANDARDS

A. 36 CFR 1191 - Americans with Disabilities Act (ADA) Accessibility Guidelines for Buildings and Facilities; Architectural Barriers Act (ABA) Accessibility Guidelines; current edition.

B. ADA Standards - Americans with Disabilities Act (ADA) Standards for Accessible Design; 2010.

C. ANSI Z124.1.2 - American National Standard for Plastic Bathtub and Shower Units; 2005.

D. ASHRAE Std 18 - Methods of Testing for Rating Drinking-Water Coolers with Self-Contained Mechanical Refrigeration; 2008.

E. ASME A112.18.1 - Plumbing Supply Fittings; The American Society of Mechanical Engineers; 2012.

F. ASME A112.19.1 - Enamelled Cast Iron and Enamelled Steel Plumbing Fixtures; 2013

G. ASME A112.19.2 - Ceramic Plumbing Fixtures; The American Society of Mechanical Engineers; 2013.

H. ASME A112.19.3 - Stainless Steel Plumbing Fixtures (Designed for Residential Use); The American Society of Mechanical Engineers; 2008 (R2013).

I. ASME A112.19.4M - Porcelain Enameled Formed Steel Plumbing Fixtures; The American Society of Mechanical Engineers; 1994 (R2004).

J. NSF 61 - Drinking Water System Components - Health Effects; 2012.

K. NSF 372 - Drinking Water System Components - Lead Content; 2011.

1.04 QUALITY ASSURANCE

A. Manufacturer Qualifications: Company specializing in manufacturing the type of products specified in this section, with minimum three years of documented experience.

1.05 REGULATORY REQUIREMENTS

A. Products Requiring Electrical Connection: Listed and classified by Underwriters Laboratories Inc., as suitable for the purpose specified and indicated.

1.06 DELIVERY, STORAGE, AND HANDLING

A. Accept fixtures on site in factory packaging. Inspect for damage.

B. Protect installed fixtures from damage by securing areas and by leaving factory packaging in place to protect fixtures and prevent use.

1.07 WARRANTY

A. See Section 01 7800 - Closeout Submittals, for additional warranty requirements.

B. Provide five year manufacturer warranty for electric water cooler.

PART 2 PRODUCTS

2.01 GENERAL

A. Potable Water Systems: Provide plumbing fittings and faucets that comply with NSF 61 and NSF 372 for maximum lead content; label pipe and fittings.

B. Water Efficiency: EPA WaterSense label is required for all water closets, urinals, lavatory faucets, and showerheads.

2.02 FLUSH VALVE WATER CLOSETS

A. Water Closets: Vitreous china, ASME A112.19.2, floor mounted, siphon jet flush action, china bolt caps.
   1. Bowl: ASME A112.19.2; 16.5 inches high with elongated rim.
   2. Flush Valve: Exposed (top spud).
   3. Flush Operation: Manual, oscillating handle.
   4. Handle Height: 44 inches or less.
   5. Supply Size: 1-1/2 inches.
   6. Outlet Size: 2 inches.
   7. Color: White.
   8. Manufacturers:
      a. American Standard, Inc; AFWALL Toilet: www.americanstandard-us.com.
      b. Gerber Plumbing Fixtures LLC; _____: www.gerberonline.com.
      c. Kohler Company: www.kohler.com.
      d. Zurn Industries, Inc: www.zurn.com.

B. Flush Valves: ASME A112.18.1, diaphragm type, complete with vacuum breaker stops and accessories.
   1. Sensor-Operated Type: Solenoid operator, low voltage hard-wired, infrared sensor and over-ride push button.
   2. Exposed Type: Chrome plated, escutcheon, integral screwdriver stop.
   3. Metering Type: Easily accessible adjustment nut.
   4. Manufacturers:
      a. American Standard, Inc; SELECTRONIC 1.28 Exposed Toilet Flush Valve: www.americanstandard-us.com.
      b. Delany Products: www.delanyvalve.com.
      c. Sloan Valve Company: www.sloanvalve.com.
      d. Zurn Industries, Inc: www.zurn.com.
      e. Substitutions: See Section 01 6000 - Product Requirements.

C. Seats:
   1. Manufacturers:
      a. American Standard, Inc: www.americanstandard-us.com.
      b. Bemis Manufacturing Company: www.bemismfg.com.
      c. Church Seat Company: www.churchseats.com.
      d. Olsonite: www.olsonite.com.
      e. Zurn Industries, Inc: www.zurn.com.
      f. Substitutions: See Section 01 6000 - Product Requirements.

2.03 WALL HUNG URINALS

A. Wall Hung Urinal Manufacturers:
   1. American Standard, Inc; WASHBROOK Urinal: www.americanstandard-us.com.
   2. Kohler Company: www.kohler.com.
   3. Zurn Industries, Inc; EcoVantage Z5798 High-Efficiency Urinal System: www.zurn.com.

4. Substitutions: See Section 01 6000 - Product Requirements.

B. Urinals: Vitreous china, ASME A112.19.2, wall hung with side shields and concealed carrier.
   1. Flush Volume: 1.0 gallon, maximum.
   2. Flush Style: Washout.
   3. Flush Valve: Exposed (top spud).
   4. Flush Operation: Sensor operated.
   5. Trap: Integral.
   6. Removable stainless steel strainer.
   7. Supply Size: 3/4 inch.
   8. Outlet Size: 2 inches.

C. Flush Valves: ASME A112.18.1, diaphragm type, complete with vacuum breaker stops and accessories.
   1. Sensor-Operated Type: Solenoid operator, low voltage hard-wired, infrared sensor and over-ride push button.
   2. Exposed Type: Chrome plated, escutcheon, integral screwdriver stop.
   3. Manufacturers:
      a. American Standard, Inc; SELECTRONIC 0.125 Exposed Urinal Flush Valve: www.americanstandard-us.com.
      b. Delany Products: www.delaneyvalve.com.
      c. Sloan Valve Company: www.sloanvalve.com.
      d. Zurn Industries, Inc; Model _____: www.zurn.com.
      e. Substitutions: See Section 01 6000 - Product Requirements.

2.04 LAVATORIES

A. Lavatory Manufacturers:
   1. American Standard, Inc; MURRO Lavatory: www.americanstandard-us.com.
   2. Kohler Company: www.kohler.com.
   3. Zurn Industries, Inc: www.zurn.com.
   4. Substitutions: See Section 01 6000 - Product Requirements.

B. Vitreous China Wall Hung Basin: ASME A112.19.2; vitreous china wall hung lavatory, _____minimum, with 4 inch high back, rectangular basin with splash lip, front overflow, and soap depression.

C. Supply Faucet Manufacturers:
   1. American Standard, Inc; SERIN Monoblock Faucet: www.americanstandard-us.com.
   2. Kohler Company: www.kohler.com.
   3. Zurn Industries, Inc: www.zurn.com.
   4. Substitutions: See Section 01 6000 - Product Requirements.

D. Sensor Operated Faucet: Cast brass, chrome plated, deck mounted with sensor located on neck of spout.
   1. Spout Style: Standard.
   2. Mixing Valve: None, single line for tempered water.
   3. Water Supply: 3/8 inch compression connections.
   4. Aerator: Vandal resistant, 0.5 GPM, laminar flow device.
   5. Finish: Polished chrome.

E. Accessories:
   1. Chrome plated 17 gage, 0.0538 inch brass P-trap with clean-out plug and arm with escutcheon.
   2. Carrier:
      a. Manufacturers:
         1) JOSAM Company: www.josam.com.
         2) Zurn Industries, Inc: www.zurn.com.
         3) Substitutions: See Section 01 6000 - Product Requirements.

2.05 SINKS

A. Sink Manufacturers:
   1. American Standard, Inc; Model _____: www.americanstandard-us.com.
   2. Kohler Company; Model _____: www.kohler.com.
   3. Substitutions: See Section 01 6000 - Product Requirements.

B. Single Compartment Bowl: ASME A112.19.3; _____ by _____ by _____ inch outside dimensions 20 gage, 0.0359 inch thick, Type 302 stainless steel, self rimming and undercoated, with ledge back drilled for trim.

C. Enamelled Bowl: ASME A112.19.4M; steel, porcelain enamelled, single compartment, _____ by _____ by _____ inch outside dimensions, self-rimming and undercoated, with 3-1/2 inch diameter crumb cup and chromed brass tailpiece, ledge back drilled for trim.

2.06 SHOWERS

A. Shower Manufacturers:
   1. American Standard, Inc; FloWise Commercial Shower System: www.americanstandard-us.com.
   2. Aqua Glass Corporation: www.aquaglass.com.
   3. Kohler Company: www.kohler.com.
   4. Substitutions: See Section 01 6000 - Product Requirements.

B. Shower Head:
   1. ASME A112.18.1; chrome plated vandal-proof institutional head with integral wall bracket, built-in 2.5 gpm flow control.

C. Low-Flow Shower Head:
   1. ASME A112.18.1; chrome plated vandal-proof institutional head with integral wall bracket, built-in 1.5 gpm flow control.

2.07 ELECTRIC WATER COOLERS

A. Electric Water Cooler Manufacturers:
   1. Tri Palm International/Oasis: www.tripalmint.com.
   2. Elkay Manufacturing Company: www.elkay.com.
   3. Haws Corporation: www.hawsco.com.
   4. Substitutions: See Section 01 6000 - Product Requirements.

B. Water Cooler: Electric, mechanically refrigerated; surface handicapped mounted; stainless steel top, vinyl on steel body, elevated anti-squirt bubbler with stream guard, automatic stream regulator, push button, mounting bracket; integral air cooled condenser and stainless steel grille.

2.08 SERVICE SINKS

A. Service Sink Manufacturers:
   1. American Standard, Inc: www.americanstandard-us.com.
   2. Zurn Industries, Inc: www.zurn.com.
   3. Substitutions: See Section 01 6000 - Product Requirements.

B. Bowl: ASME A112.19.1; 22 by 18 by 12 inch deep, porcelain enamelled (inside only) cast iron roll-rim sink, with 12 inch high back, concealed hanger, chrome plated strainer, stainless steel rim guard, cast iron P-trap with adjustable floor flange.

PART 3 EXECUTION

3.01 EXAMINATION

A. Verify that walls and floor finishes are prepared and ready for installation of fixtures.

B. Verify that electric power is available and of the correct characteristics.

C. Confirm that millwork is constructed with adequate provision for the installation of counter top lavatories and sinks.

3.02 PREPARATION

A. Rough-in fixture piping connections in accordance with minimum sizes indicated in fixture rough-in schedule for particular fixtures.

3.03 INSTALLATION

A. Install each fixture with trap, easily removable for servicing and cleaning.

B. Provide chrome plated rigid or flexible supplies to fixtures with loose key stops, reducers, and escutcheons.

C. Install components level and plumb.

D. Install and secure fixtures in place with wall supports and bolts.

E. Solidly attach water closets to floor with lag screws. Lead flashing is not intended hold fixture in place.

3.04 INTERFACE WITH WORK OF OTHER SECTIONS

A. Review millwork shop drawings. Confirm location and size of fixtures and openings before rough-in and installation.

3.05 ADJUSTING

A. Adjust stops or valves for intended water flow rate to fixtures without splashing, noise, or overflow.

3.06 CLEANING

A. Clean plumbing fixtures and equipment.

3.07 PROTECTION

A. Protect installed products from damage due to subsequent construction operations.

B. Do not permit use of fixtures by construction personnel.

C. Repair or replace damaged products before Date of Substantial Completion.

3.08 SCHEDULES

A. Fixture Heights: Install fixtures to heights above finished floor as indicated.
   1. Water Closet:
      a. Standard: 15 inches to top of bowl rim.
   2. Water Closet Flush Valves:
      a. Standard: 11 inches min. above bowl rim.
      b. Recessed: 10 inches min. above bowl rim.
   3. Urinal:
      a. Standard: 22 inches to top of bowl rim.
      b. Accessible: 17 inches to top of bowl rim.
   4. Lavatory:
      a. Standard: 31 inches to top of basin rim.
   5. Shower Heads:
      a. Adult Male: 69.5 inches to bottom of head.

END OF SECTION

SECTION 23 0513

COMMON MOTOR REQUIREMENTS FOR HVAC EQUIPMENT

PART 2 PRODUCTS

1.01 MANUFACTURERS

A. Lincoln Motors: www.lincolnmotors.com.

B. A. O. Smith Electrical Products Company: www.aosmithmotors.com.

C. Reliance Electric/Rockwell Automation: www.reliance.com.

1.02 GENERAL CONSTRUCTION AND REQUIREMENTS

A. Electrical Service: Refer to Section 26 2717 for required electrical characteristics.

B. Construction:
   1. Open drip-proof type except where specifically noted otherwise.
   2. Design for continuous operation in 40 degrees C environment.
   3. Design for temperature rise in accordance with NEMA MG 1 limits for insulation class, service factor, and motor enclosure type.

C. Visible Nameplate: Indicating motor horsepower, voltage, phase, cycles, RPM, full load amps, locked rotor amps, frame size, manufacturer's name and model number, service factor, power factor, efficiency.

D. Wiring Terminations:
   1. Provide terminal lugs to match branch circuit conductor quantities, sizes, and materials indicated. Enclose terminal lugs in terminal box sized to NFPA 70, threaded for conduit.
   2. For fractional horsepower motors where connection is made directly, provide threaded conduit connection in end frame.

1.03 APPLICATIONS

A. Single phase motors for shaft mounted fans, oil burners, and centrifugal pumps: Split phase type.

B. Single phase motors for shaft mounted fans or blowers: Permanent split capacitor type.

C. Single phase motors for fans, pumps, blowers, and air compressors: Capacitor start type.

D. Single phase motors for fans, blowers, and pumps: Capacitor start, capacitor run type.

E. Motors located in exterior locations, wet air streams downstream of sprayed coil dehumidifiers, draw through cooling towers, air cooled condensers, humidifiers, direct drive axial fans, roll filters, explosion proof environments, and dust collection systems: Totally enclosed type.

F. Motors located in outdoors, in wet air streams downstream of sprayed coil dehumidifiers, in draw through cooling towers, and in humidifiers: Totally enclosed weatherproof epoxy-treated type.

G. Motors located outdoors and in draw through cooling towers: Totally enclosed weatherproof epoxy-sealed type.

1.04 SINGLE PHASE POWER - SPLIT PHASE MOTORS

A. Starting Torque: Less than 150 percent of full load torque.

B. Starting Current: Up to seven times full load current.

C. Breakdown Torque: Approximately 200 percent of full load torque.

D. Drip-proof Enclosure: Class A (50 degrees C temperature rise) insulation, NEMA Service Factor, prelubricated sleeve or ball bearings.

E. Enclosed Motors: Class A (50 degrees C temperature rise) insulation, 1.0 Service Factor, prelubricated ball bearings.

1.05 SINGLE PHASE POWER - PERMANENT-SPLIT CAPACITOR MOTORS

A. Starting Torque: Exceeding one fourth of full load torque.

B. Starting Current: Up to six times full load current.

C. Multiple Speed: Through tapped windings.

D. Open Drip-proof or Enclosed Air Over Enclosure: Class A (50 degrees C temperature rise) insulation, minimum 1.0 Service Factor, prelubricated sleeve or ball bearings, automatic reset overload protector.

1.06 SINGLE PHASE POWER - CAPACITOR START MOTORS

A. Starting Torque: Three times full load torque.

B. Starting Current: Less than five times full load current.

C. Pull-up Torque: Up to 350 percent of full load torque.

D. Breakdown Torque: Approximately 250 percent of full load torque.

E. Motors: Capacitor in series with starting winding; provide capacitor-start/capacitor-run motors with two capacitors in parallel with run capacitor remaining in circuit at operating speeds.

F. Drip-proof Enclosure: Class A (50 degrees C temperature rise) insulation, NEMA Service Factor, prelubricated sleeve bearings.

G. Enclosed Motors: Class A (50 degrees C temperature rise) insulation, 1.0 Service Factor, prelubricated ball bearings.

1.07 THREE PHASE POWER - SQUIRREL CAGE MOTORS

A. Starting Torque: Between 1 and 1-1/2 times full load torque.

B. Starting Current: Six times full load current.

C. Power Output, Locked Rotor Torque, Breakdown or Pull Out Torque: NEMA Design B characteristics.

D. Design, Construction, Testing, and Performance: Conform to NEMA MG 1 for Design B motors.

E. Insulation System: NEMA Class B or better.

F. Testing Procedure: In accordance with IEEE 112. Load test motors to determine free from electrical or mechanical defects in compliance with performance data.

G. Motor Frames: NEMA Standard T-Frames of steel, aluminum, or cast iron with end brackets of cast iron or aluminum with steel inserts.

H. Thermistor System (Motor Frame Sizes 254T and Larger): Three PTC thermistors embedded in motor windings and epoxy encapsulated solid state control relay for wiring into motor starter; refer to Section 26 2913.

I. Bearings: Grease lubricated anti-friction ball bearings with housings equipped with plugged provision for relubrication, rated for minimum ABMA STD 9, L-10 life of 20,000 hours. Calculate bearing load with NEMA minimum V-belt pulley with belt center line at end of NEMA standard shaft extension. Stamp bearing sizes on nameplate.

J. Sound Power Levels: To NEMA MG 1.

K. Part Winding Start Where Indicated: Use part of winding to reduce locked rotor starting current to approximately 60 percent of full winding locked rotor current while providing approximately 50 percent of full winding locked rotor torque.

L. Weatherproof Epoxy Sealed Motors: Epoxy seal windings using vacuum and pressure with rotor and starter surfaces protected with epoxy enamel; bearings double shielded with waterproof non-washing grease.

M. Nominal Efficiency: As scheduled at full load and rated voltage when tested in accordance with IEEE 112.

N. Nominal Power Factor: As scheduled at full load and rated voltage when tested in accordance with IEEE 112.

PART 3 EXECUTION

2.01 INSTALLATION

A. Install in accordance with manufacturer's instructions.

B. Install securely on firm foundation. Mount ball bearing motors with shaft in any position.

C. Check line voltage and phase and ensure agreement with nameplate.

END OF SECTION

SECTION 23 0548

VIBRATION AND SEISMIC CONTROLS FOR HVAC PIPING AND EQUIPMENT

PART 1 GENERAL

1.01 SECTION INCLUDES

A. Equipment support bases.

B. Vibration isolators.

C. Seismic restraints for suspended components and equipment..

D. Roof curbs.

1.02 RELATED REQUIREMENTS

A. Section 03 3000 - Cast-in-Place Concrete.

1.03 REFERENCE STANDARDS

A. ASCE 7 - Minimum Design Loads for Buildings and Other Structures; 2011.

B. ASHRAE (HVACA) - ASHRAE Handbook - HVAC Applications; American Society of Heating, Refrigerating and Air-Conditioning Engineers, Inc.; 2011.

C. FEMA 412 - Installing Seismic Restraints for Mechanical Equipment; 2002.

D. FEMA 413 - Installing Seismic Restraints for Electrical Equipment; 2004.

E. FEMA E-74 - Reducing the Risks of Nonstructural Earthquake Damage: A Practical Guide; 2011.

F. IAS AC172 - Accreditation Criteria for Fabricator Inspection Programs for Structural Steel; International Accreditation Service, Inc.; 2011.

G. SMACNA (SRM) - Seismic Duct Restraint Manual; Sheet Metal and Air Conditioning Contractors' National Association; 2008.

1.04 SUBMITTALS

A. See Section 01 3000 - Administrative Requirements, for submittal procedures.

B. Product Data:

C. Shop Drawings:

D. Manufacturer's Instructions: Indicate installation instructions with special procedures and setting dimensions.

1.05 QUALITY ASSURANCE

A. Perform design and installation in accordance with applicable codes.

B. Designer Qualifications: Perform design under direct supervision of a Professional Engineer experienced in design of this type of work and registered and licensed in the State in which the Project is located.

C. Manufacturer Qualifications: Company specializing in manufacturing products specified in this section, with not less than three years of documented experience.

PART 2 PRODUCTS

2.01 MANUFACTURERS

A. Kinetics Noise Control, Inc: www.kineticsnoise.com.

B. Mason Industries: www.mason-ind.com.

C. Vibration Eliminator Company, Inc: www.veco-ny.com.

D. Substitutions: See Section 01 6000 - Product Requirements.

2.02 PERFORMANCE REQUIREMENTS

A. General:

1. All vibration isolators, base frames and inertia bases to conform to all uniform deflection and stability requirements under all operating loads.
2. Steel springs to function without undue stress or overloading.
3. Steel springs to operate in the linear portion of the load versus deflection curve over deflection range of not less than 50 percent above specified deflection.
4. Lateral to vertical stiffness ratio to not exceed 0.08 with spring deflection at minimum 75 percent of specified deflection.
5. All equipment mounted on vibration isolated bases to have minimum operating clearance of 2 inches between the base and floor or support beneath unless noted otherwise.

2.03 VIBRATION ISOLATORS

A. Non-Seismic Type:

2.04 SEISMIC RESTRAINTS FOR SUSPENDED COMPONENTS AND EQUIPMENT

A. Comply with:
1. ASHRAE Handbook - HVAC Applications
2. FEMA 412
3. FEMA 413
4. FEMA 414
5. FEMA E-74
6. SMACNA - Seismic Duct Restraint Manual

PART 3 EXECUTION

3.01 INSTALLATION - GENERAL

A. Install in accordance with manufacturer's instructions.

B. Bases:
1. Adjust equipment level.

C. Prior to making piping connections to equipment with operating weights substantially different from installed weights, block up equipment with temporary shims to final height. When full load is applied, adjust isolators to load to allow shim removal.

3.02 INSTALLATION - SEISMIC

A. Comply with:
1. ASHRAE Handbook - HVAC Applications
2. SMACNA - Seismic Duct Restraint Manual

B. Suspended Mechanical Equipment:
1. Provide supports and bracing to resist seismic design force in any direction.
2. Provide flexible connections between equipment and interconnected piping.
3. Brace equipment hung from spring mounts using cable or other bracing that will not transmit vibration to the structure.
4. Use of proprietary restraint systems with a certificate of compliance, verified and listed by an accredited inspection body is acceptable (pending shop drawing approval), as an alternative to project specific seismic bracing design.

C. Piping:
1. Provide supports, braces, and anchors to resist gravity and seismic design forces.
2. Provide flexible connections between floor mounted equipment and suspended piping; between unbraced piping and restrained suspended items; as required for thermal movement; at building separations and seismic joints; and wherever relative differential movements could damage pipe in an earthquake.
3. Brace resiliently supported pipe with cable bracing or alternate means designed to prevent transmission of vibrations and noise to the structure.
4. Brace every run 5.0 feet or more in length with two transverse and one longitudinal bracing locations.
5. Pipes and Connections Constructed of Ductile Materials (copper, ductile iron, steel or aluminum and brazed, welded or screwed connections):

6. Piping Explicitly Exempt from Seismic Bracing Requirements:
    a. Provide flexible connections between piping and connected equipment, including in-line devices such as VAV boxes and reheat coils.
    b. Install piping consistent with ASCE 7, such that swinging of the pipes will not cause damaging impact with adjacent components, finishes, or structural framing while maintaining clear horizontal distance of 67 percent of the hanger length between subject components.
    c. Provide swing restraints as required to control potential impact due to limited space between subject components.
7. Use of proprietary restraint systems with a certificate of compliance, verified and listed by an accredited inspection body is acceptable (pending shop drawing approval), as an alternative to project specific seismic bracing design.
8. Re-use of Existing Hangers:
    a. Re-using existing hangers at locations of seismic bracing are to be judged on a case-by-case basis by the registered project design professional.
    b. Unless otherwise shown on the drawings, it is assumed all hangers supporting new piping, located at a seismic brace, will be new.

D. Ductwork:
1. Provide seismic bracing for ducts with cross sectional area greater than 6 sq ft (independent of duct contents).
2. Provide supports, braces, and anchors to resist gravity and seismic design forces.
3. Independently support in-line devices weighing more than 20 pounds.
4. Independently support and brace all in-line devices weighing more than 75 pounds.
5. Provide unbraced piping attached to braced in-line equipment with adequate flexibility to accommodate differential displacements.
6. Positively attach dampers, louvers, diffusers and similar appurtenances to ductwork with mechanical fasteners.
7. Install duct supports designed to resist not less than 150 percent of the duct weight.
8. The use of power driven fasteners is prohibited in the hanging of ducts weighing over 10 pounds per lineal foot for seismic design categories D, E, and F.
9. Use of proprietary restraint systems with a certificate of compliance, verified and listed by an IAS AC172 accredited inspection body or otherwise accepted by applicable codes is acceptable (pending shop drawing approval), as an alternative to project specific seismic bracing design.

E. Tanks:
1. Install tank anchorage, tank legs and/or supporting structure designed to resist design force.
2. Provide flexible connections between tank and interconnected piping.

END OF SECTION

SECTION 23 0553

IDENTIFICATION FOR HVAC PIPING AND EQUIPMENT

PART 1 GENERAL

1.01 SECTION INCLUDES

A. Nameplates.

B. Tags.

C. Stencils.

D. Pipe Markers.

1.02 RELATED REQUIREMENTS

A. Section 09 9123 - Interior Painting: Identification painting.

1.03 REFERENCE STANDARDS

A. ASME A13.1 - Scheme for the Identification of Piping Systems; The American Society of Mechanical Engineers; 2007.

B. ASTM D709 - Standard Specification for Laminated Thermosetting Materials; 2013.

1.04 SUBMITTALS

A. See Section 01 3000 - Administrative Requirements, for submittal procedures.

B. Product Data: Provide manufacturers catalog literature for each product required.

C. Manufacturer's Installation Instructions: Indicate special procedures, and installation.

PART 2 PRODUCTS

2.01 IDENTIFICATION APPLICATIONS

A. Air Handling Units: Nameplates.

B. Air Terminal Units: Tags.

C. Automatic Controls: Tags. Key to control schematic.

D. Control Panels: Nameplates.

E. Small-sized Equipment: Tags.

F. Thermostats: Nameplates.

2.02 NAMEPLATES

A. Manufacturers:
   1. Advanced Graphic Engraving: www.advancedgraphicengraving.com.
   2. Brimar Industries, Inc.: www.pipemarker.com.
   3. Kolbi Pipe Marker Co.: www.kolbipipemarkers.com.
   4. Substitutions: See Section 01 6000 - Product Requirements.

2.03 TAGS

A. Manufacturers:
   1. Advanced Graphic Engraving: www.advancedgraphicengraving.com.
   2. Brady Corporation: www.bradycorp.com.
   3. Brimar Industries, Inc.; _____: www.pipemarker.com.

2.04 STENCILS

A. Manufacturers:
   1. Brady Corporation: www.bradycorp.com.
   2. Kolbi Pipe Marker Co.: www.kolbipipemarkers.com.
   3. Seton Identification Products: www.seton.com.

B. Stencils: With clean cut symbols and letters of following size:

2.05 PIPE MARKERS

A. Manufacturers:
   1. Brady Corporation: www.bradycorp.com.
   2. Brimar Industries, Inc.; _____: www.pipemarker.com.
   3. Kolbi Pipe Marker Co.: www.kolbipipemarkers.com.

B. Plastic Pipe Markers: Factory fabricated, flexible, semi- rigid plastic, preformed to fit around pipe or pipe covering; minimum information indicating flow direction arrow and identification of fluid being conveyed.

C. Plastic Tape Pipe Markers: Flexible, vinyl film tape with pressure sensitive adhesive backing and printed markings.

2.06 CEILING TACKS

A. Manufacturers:
   1. Craftmark: www.craftmarkid.com.
   2. Substitutions: See Section 01 6000 - Product Requirements.

B. Description: Steel with 3/4 inch diameter color coded head.

C. Color code as follows:
   1. HVAC Equipment: Yellow.

PART 3 EXECUTION

3.01 PREPARATION

A. Degrease and clean surfaces to receive adhesive for identification materials.

B. Prepare surfaces in accordance with Section 09 9123 for stencil painting.

3.02 INSTALLATION

A. Install plastic tape pipe markers complete around pipe in accordance with manufacturer's instructions.

END OF SECTION

SECTION 23 0593

TESTING, ADJUSTING, AND BALANCING FOR HVAC

PART 1 GENERAL

1.01 SECTION INCLUDES

A. Testing, adjustment, and balancing of air systems.

B. Measurement of final operating condition of HVAC systems.

C. Commissioning activities.

1.02 RELATED REQUIREMENTS

A. Section 01 9113: Commissioning requirements that apply to all types of work.

B. Section 23 0800 - Commissioning of HVAC.

1.03 REFERENCE STANDARDS

A. AABC MN-1 - AABC National Standards for Total System Balance; Associated Air Balance Council; 2002.

B. ASHRAE Std 111 - Practices for Measurement, Testing, Adjusting and Balancing of Building Heating, Ventilation, Air-Conditioning, and Refrigeration Systems; American Society of Heating, Refrigerating and Air-Conditioning Engineers, Inc.; 2008.

C. NEBB (TAB) - Procedural Standards for Testing Adjusting Balancing of Environmental Systems; National Environmental Balancing Bureau; 2005, Seventh Edition.

D. SMACNA (TAB) - HVAC Systems Testing, Adjusting, and Balancing; Sheet Metal and Air Conditioning Contractors' National Association; 2002.

1.04 SUBMITTALS

A. See Section 01 3000 - Administrative Requirements, for submittal procedures.

B. TAB Plan: Submit a written plan indicating the testing, adjusting, and balancing standard to be followed and the specific approach for each system and component.
   1. Submit to the Commissioning Authority.
   2. Include certification that the plan developer has reviewed the contract documents, the equipment and systems, and the control system with the Architect and other installers to sufficiently understand the design intent for each system.
   3. Include at least the following in the plan:
      a. Preface: An explanation of the intended use of the control system.
      b. List of all air flow, water flow, sound level, system capacity and efficiency measurements to be performed and a description of specific test procedures, parameters, formulas to be used.
      c. Copy of field checkout sheets and logs to be used, listing each piece of equipment to be tested, adjusted and balanced with the data cells to be gathered for each.
      d. Discussion of what notations and markings will be made on the duct and piping drawings during the process.
      e. Final test report forms to be used.
      f. Procedures for formal deficiency reports, including scope, frequency and distribution.

C. Final Report: Indicate deficiencies in systems that would prevent proper testing, adjusting, and balancing of systems and equipment to achieve specified performance.
   1. Revise TAB plan to reflect actual procedures and submit as part of final report.
   2. Submit draft copies of report for review prior to final acceptance of Project. Provide final copies for Architect and for inclusion in operating and maintenance manuals.
   3. Provide reports in soft cover, letter size, 3-ring binder manuals, complete with index page and indexing tabs, with cover identification at front and side. Include set of reduced drawings with air outlets and equipment identified to correspond with data sheets, and indicating thermostat locations.

4. Include actual instrument list, with manufacturer name, serial number, and date of calibration.
5. Form of Test Reports: Where the TAB standard being followed recommends a report format use that; otherwise, follow ASHRAE Std 111.

PART 2 PRODUCTS - NOT USED

PART 3 EXECUTION

3.01 GENERAL REQUIREMENTS

A. Perform total system balance in accordance with one of the following:
   1. AABC MN-1, AABC National Standards for Total System Balance.
   2. NEBB Procedural Standards for Testing Adjusting Balancing of Environmental Systems.
   3. SMACNA (TAB).

B. Begin work after completion of systems to be tested, adjusted, or balanced and complete work prior to Substantial Completion of the project.

C. Where HVAC systems and/or components interface with life safety systems, including fire and smoke detection, alarm, and control, coordinate scheduling and testing and inspection procedures with the authorities having jurisdiction.

D. TAB Agency Qualifications:
   1. Company specializing in the testing, adjusting, and balancing of systems specified in this section.
   2. Having minimum of three years documented experience.
   3. Certified by one of the following:
      a. AABC, Associated Air Balance Council: www.aabchq.com; upon completion submit AABC National Performance Guaranty.
      b. NEBB, National Environmental Balancing Bureau: www.nebb.org.
      c. TABB, The Testing, Adjusting, and Balancing Bureau of National Energy Management Institute: www.tabbcertified.org.

E. TAB Supervisor and Technician Qualifications: Certified by same organization as TAB agency.

F. TAB Supervisor Qualifications: Professional Engineer licensed in the State in which the Project is located.

3.02 EXAMINATION

A. Verify that systems are complete and operable before commencing work. Ensure the following conditions:
   1. Systems are started and operating in a safe and normal condition.
   2. Temperature control systems are installed complete and operable.
   3. Proper thermal overload protection is in place for electrical equipment.
   4. Final filters are clean and in place. If required, install temporary media in addition to final filters.
   5. Duct systems are clean of debris.
   6. Fans are rotating correctly.
   7. Fire and volume dampers are in place and open.
   8. Air coil fins are cleaned and combed.
   9. Access doors are closed and duct end caps are in place.
   10. Air outlets are installed and connected.
   11. Duct system leakage is minimized.
   12. Hydronic systems are flushed, filled, and vented.
   13. Service and balance valves are open.

B. Submit field reports. Report defects and deficiencies that will or could prevent proper system balance.

C. Beginning of work means acceptance of existing conditions.

3.03 PREPARATION

A. Provide additional balancing devices as required.

3.04 ADJUSTMENT TOLERANCES

A. Air Handling Systems: Adjust to within plus or minus 5 percent of design for supply systems and plus or minus 10 percent of design for return and exhaust systems.

B. Air Outlets and Inlets: Adjust total to within plus 10 percent and minus 5 percent of design to space. Adjust outlets and inlets in space to within plus or minus 10 percent of design.

3.05 RECORDING AND ADJUSTING

A. Field Logs: Maintain written logs including:
   1. Running log of events and issues.
   2. Discrepancies, deficient or uncompleted work by others.
   3. Contract interpretation requests.
   4. Lists of completed tests.

B. Ensure recorded data represents actual measured or observed conditions.

C. Permanently mark settings of valves, dampers, and other adjustment devices allowing settings to be restored. Set and lock memory stops.

D. After adjustment, take measurements to verify balance has not been disrupted or that such disruption has been rectified.

E. Leave systems in proper working order, replacing belt guards, closing access doors, closing doors to electrical switch boxes, and restoring thermostats to specified settings.

3.06 AIR SYSTEM PROCEDURE

A. Adjust air handling and distribution systems to provide required or design supply, return, and exhaust air quantities at site altitude.

B. Make air quantity measurements in ducts by Pitot tube traverse of entire cross sectional area of duct.

C. Measure air quantities at air inlets and outlets.

D. Adjust distribution system to obtain uniform space temperatures free from objectionable drafts and noise.

E. Use volume control devices to regulate air quantities only to extend that adjustments do not create objectionable air motion or sound levels. Effect volume control by duct internal devices such as dampers and splitters.

F. Vary total system air quantities by adjustment of fan speeds. Provide drive changes required. Vary branch air quantities by damper regulation.

G. Provide system schematic with required and actual air quantities recorded at each outlet or inlet.

H. Measure static air pressure conditions on air supply units, including filter and coil pressure drops, and total pressure across the fan. Make allowances for 50 percent loading of filters.

I. Adjust outside air automatic dampers, outside air, return air, and exhaust dampers for design conditions.

J. Measure temperature conditions across outside air, return air, and exhaust dampers to check leakage.

K. Where modulating dampers are provided, take measurements and balance at extreme conditions. Balance variable volume systems at maximum air flow rate, full cooling, and at minimum air flow rate, full heating.

L. Measure building static pressure and adjust supply, return, and exhaust air systems to provide required relationship between each to maintain approximately 0.05 inches positive static pressure near the building entries.

M. Check multi-zone units for motorized damper leakage. Adjust air quantities with mixing dampers set first for cooling, then heating, then modulating.

N. For variable air volume system powered units set volume controller to air flow setting indicated. Confirm connections properly made and confirm proper operation for automatic variable air volume temperature control.

O. On fan powered VAV boxes, adjust air flow switches for proper operation.

3.07 COMMISSIONING

A. See Sections 01 9113 and 23 0800 for additional requirements.

B. Perform prerequisites prior to starting commissioning activities.

C. Fill out Prefunctional Checklists for:
   1. Air side systems.
   2. Water side systems.

D. Furnish to the Commissioning Authority, upon request, any data gathered but not shown in the final TAB report.

E. Re-check a random sample equivalent to 50% percent of the final TAB report data as directed by Commissioning Authority.
   1. Original TAB agency shall execute the re-checks, witnessed by the Commissioning Authority.
   2. Use the same test instruments as used in the original TAB work.
   3. Failure of more than 10 percent of the re-checked items of a given system shall result in the rejection of the system TAB report; rebalance the system, provide a new system TAB report, and repeat random re-checks.
   4. For purposes of re-check, failure is defined as follows:
      a. Air Flow of Supply and Return: Deviation of more than 10 percent of instrument reading.
      b. Minimum Outside Air Flow: Deviation of more than 20 percent of instrument reading; for inlet vane or VFD OSA compensation system using linear proportional control, deviation of more than 30 percent at intermediate supply flow.
      c. Temperatures: Deviation of more than one degree F.
      d. Air and Water Pressures: Deviation of more than 10 percent of full scale of test instrument reading.
      e. Sound Pressures: Deviation of more than 3 decibels, with consideration for variations in background noise.
   5. For purposes of re-check, a whole system is defined as one in which inaccuracies will have little or no impact on connected systems; for example, the air distribution system served by one air handler or the hydronic chilled water supply system served by a chiller or the condenser water system.

F. In the presence of the Commissioning Authority, verify that:
   1. Final settings of all valves, splitters, dampers and other adjustment devices have been permanently marked.
   2. The air system is being controlled to the lowest possible static pressure while still meeting design loads, less diversity; this shall include a review of TAB methods, established control setpoints, and physical verification of at least one leg from fan to diffuser having all balancing dampers wide open and that during full cooling of all terminal units taking off downstream of the static pressure sensor, the terminal unit on the critical leg has its damper 90 percent or more open.
   3. The water system is being controlled to the lowest possible pressure while still meeting design loads, less diversity; this shall include a review of TAB methods, established control setpoints, and physical verification of at least one leg from the pump to the coil having all balancing valves wide open and that during full cooling the cooling coil valve of that leg is 90 percent or more open.

END OF SECTION

SECTION 23 0713
DUCT INSULATION

PART 1 GENERAL

1.01 SECTION INCLUDES

A. Duct insulation.

B. Insulation jackets.

1.02 RELATED REQUIREMENTS

A. Section 23 3100 - HVAC Ducts and Casings: Glass fiber ducts.

1.03 REFERENCE STANDARDS

A. ASTM C553 - Specification for Mineral Fiber Blanket Thermal Insulation for Commercial and Industrial Applications; 2013.

B. ASTM C612 - Standard Specification for Mineral Fiber Block and Board Thermal Insulation; 2014.

C. ASTM C1290 - Standard Specification for Flexible Fibrous Glass Blanket Insulation Used to Externally Insulate HVAC Ducts; 2011.

D. ASTM E84 - Standard Test Method for Surface Burning Characteristics of Building Materials; 2014.

E. ASTM E96/E96M - Standard Test Methods for Water Vapor Transmission of Materials; 2014.

F. NFPA 255 - Standard Method of Test of Surface Burning Characteristics of Building Materials; National Fire Protection Association; 2006.

G. SMACNA (DCS) - HVAC Duct Construction Standards; Sheet Metal and Air Conditioning Contractors' National Association; 2005.

H. UL 723 - Standard for Test for Surface Burning Characteristics of Building Materials; Underwriters Laboratories Inc.; Current Edition, Including All Revisions.

1.04 SUBMITTALS

A. See Section 01 3000 - Administrative Requirements, for submittal procedures.

B. Product Data: Provide product description, thermal characteristics, list of materials and thickness for each service, and locations.

C. Manufacturer's Instructions: Indicate installation procedures necessary to ensure acceptable workmanship and that installation standards will be achieved.

1.05 QUALITY ASSURANCE

1.06 DELIVERY, STORAGE, AND HANDLING

A. Accept materials on site in original factory packaging, labelled with manufacturer's identification, including product density and thickness.

B. Protect insulation from weather and construction traffic, dirt, water, chemical, and mechanical damage, by storing in original wrapping.

1.07 FIELD CONDITIONS

A. Maintain ambient temperatures and conditions required by manufacturers of adhesives, mastics, and insulation cements.

B. Maintain temperature during and after installation for minimum period of 24 hours.

PART 2 PRODUCTS

2.01 REQUIREMENTS FOR ALL PRODUCTS OF THIS SECTION

A. Surface Burning Characteristics: Flame spread/Smoke developed index of 25/50, maximum, when tested in accordance with ASTM E84, NFPA 255, or UL 723.

2.02 GLASS FIBER, FLEXIBLE

A. Insulation: ASTM C553; flexible, noncombustible blanket.

2.03 GLASS FIBER, RIGID

A. Insulation: ASTM C612; rigid, noncombustible blanket.

2.04 JACKETS

PART 3 EXECUTION

3.01 INSTALLATION

A. Install in accordance with manufacturer's instructions.

B. Insulated ducts conveying air below ambient temperature:
   1. Provide insulation with vapor barrier jackets.
   2. Finish with tape and vapor barrier jacket.
   3. Continue insulation through walls, sleeves, hangers, and other duct penetrations.
   4. Insulate entire system including fittings, joints, flanges, fire dampers, flexible connections, and expansion joints.

C. Insulated ducts conveying air above ambient temperature:

D. All Ducts Exposed in Mechanical Equipment Rooms or Finished Spaces (below 10 feet above finished floor): Finish with canvas jacket sized for finish painting.

E. Exterior Applications: Provide insulation with vapor barrier jacket. Cover with with calked aluminum jacket with seams located on bottom side of horizontal duct section.

F. External Duct Insulation Application:
   1. Secure insulation with vapor barrier with wires and seal jacket joints with vapor barrier adhesive or tape to match jacket.
   2. Secure insulation without vapor barrier with staples, tape, or wires.
   3. Install without sag on underside of duct. Use adhesive or mechanical fasteners where necessary to prevent sagging. Lift duct off trapeze hangers and insert spacers.
   4. Seal vapor barrier penetrations by mechanical fasteners with vapor barrier adhesive.
   5. Stop and point insulation around access doors and damper operators to allow operation without disturbing wrapping.

END OF SECTION

SECTION 23 0719
HVAC PIPING INSULATION

PART 1 GENERAL

1.01 SECTION INCLUDES

A. Piping insulation.

B. Jackets and accessories.

1.02 RELATED REQUIREMENTS

A. Section 22 1005 - Plumbing Piping: Placement of hangers and hanger inserts.

B. Section 23 2300 - Refrigerant Piping: Placement of inserts.

1.03 REFERENCE STANDARDS

A. ASTM C177 - Standard Test Method for Steady-State Heat Flux Measurements and Thermal Transmission Properties by Means of the Guarded Hot Plate Apparatus; 2013.

B. ASTM C547 - Standard Specification for Mineral Fiber Pipe Insulation; 2012.

C. ASTM C552 - Standard Specification for Cellular Glass Thermal Insulation; 2013.

D. ASTM C585 - Standard Practice for Inner and Outer Diameters of Rigid Thermal Insulation for Nominal Sizes of Pipe and Tubing (NPS System); 2010.

E. ASTM C795 - Standard Specification for Thermal Insulation for Use in Contact with Austenitic Stainless Steel; 2008 (Reapproved 2013).

F. ASTM D1056 - Standard Specification for Flexible Cellular Materials--Sponge or Expanded Rubber; 2014.

G. ASTM E84 - Standard Test Method for Surface Burning Characteristics of Building Materials; 2014.

H. ASTM E96/E96M - Standard Test Methods for Water Vapor Transmission of Materials; 2014.

I. NFPA 255 - Standard Method of Test of Surface Burning Characteristics of Building Materials; National Fire Protection Association; 2006.

J. UL 723 - Standard for Test for Surface Burning Characteristics of Building Materials; Underwriters Laboratories Inc.; Current Edition, Including All Revisions.

1.04 SUBMITTALS

A. See Section 01 3000 - Administrative Requirements, for submittal procedures.

B. Product Data: Provide product description, thermal characteristics, list of materials and thickness for each service, and locations.

1.05 QUALITY ASSURANCE

A. Manufacturer Qualifications: Company specializing in manufacturing the Products specified in this section with not less than three years of documented experience.

1.06 DELIVERY, STORAGE, AND HANDLING

A. Accept materials on site, labeled with manufacturer's identification, product density, and thickness.

1.07 FIELD CONDITIONS

A. Maintain ambient conditions required by manufacturers of each product.

B. Maintain temperature before, during, and after installation for minimum of 24 hours.

PART 2 PRODUCTS

2.01 REQUIREMENTS FOR ALL PRODUCTS OF THIS SECTION

A. Surface Burning Characteristics: Flame spread/Smoke developed index of 25/50, maximum, when tested in accordance with ASTM E84, NFPA 255, or UL 723.

2.02 GLASS FIBER

A. Manufacturers:
   1. Knauf Insulation: www.knaufusa.com.
   2. Johns Manville: www.jm.com.
   3. Owens Corning Corporation; Fiberglas Pipe Insulation ASJ: www.ocbuildingspec.com.
   4. CertainTeed Corporation: www.certainteed.com.
   5. Substitutions: See Section 01 6000 - Product Requirements.

B. Insulation: ASTM C547 and ASTM C795; rigid molded, noncombustible.
   1. 'K' value: ASTM C177, 0.24 at 75 degrees F.
   2. Maximum service temperature: 850 degrees F.
   3. Maximum moisture absorption: 0.2 percent by volume.

C. Vapor Barrier Jacket: White kraft paper with glass fiber yarn, bonded to aluminized film; moisture vapor transmission when tested in accordance with ASTM E96/E96M of 0.02 perm-inches.

D. Tie Wire: 0.048 inch stainless steel with twisted ends on maximum 12 inch centers.

2.03 CELLULAR GLASS

A. Insulation: ASTM C552, Type 1.
   1. Apparent Thermal Conductivity; 'K' value: Grade 6, 0.33 at 100 degrees F.
   2. Service Temperature: Up to 800 degrees F.
   3. Water Vapor Permeability: 0.005 perm inch.
   4. Water Absorption: 0.5 percent by volume, maximum.

2.04 POLYETHYLENE

A. Insulation: Flexible closed-cell polyethylene tubing, slit lengthwise for installation, complying with applicable requirements of ASTM D1056.
   1. 'K' value: ASTM C177; 0.25 at 75 degrees F.
   2. Maximum Service Temperature: 300 degrees F.
   3. Density: 2 lb/cu ft.
   4. Maximum Moisture Absorption: 1.0 percent by volume.
   5. Moisture Vapor Permeability: 0.05 perm inch, when tested in accordance with ASTM E96/E96M.
   6. Connection: Contact adhesive.

2.05 JACKETS

A. PVC Plastic.
   1. Jacket: One piece molded type fitting covers and sheet material, off-white color.
      a. Minimum Service Temperature: 0 degrees F.
      b. Maximum Service Temperature: 150 degrees F.
      c. Moisture Vapor Permeability: 0.002 perm inch, maximum, when tested in accordance with ASTM E96/E96M.
      d. Thickness: 10 mil.
      e. Connections: Brush on welding adhesive.

B. ABS Plastic:
   1. Jacket: One piece molded type fitting covers and sheet material, off-white color.
      a. Minimum Service Temperature: -40 degrees F.
      b. Maximum Service Temperature of 180 degrees F.
      c. Moisture Vapor Permeability: 0.012 perm inch, when tested in accordance with ASTM E96/E96M.
      d. Thickness: 30 mil.
      e. Connections: Brush on welding adhesive.

PART 3 EXECUTION

3.01 EXAMINATION

A. Verify that piping has been tested before applying insulation materials.

B. Verify that surfaces are clean and dry, with foreign material removed.

3.02 INSTALLATION

A. Install in accordance with manufacturer's instructions.

B. Install in accordance with NAIMA National Insulation Standards.

C. Exposed Piping: Locate insulation and cover seams in least visible locations.

D. Insulated pipes conveying fluids below ambient temperature: Insulate entire system including fittings, valves, unions, flanges, strainers, flexible connections, pump bodies, and expansion joints.

E. Glass fiber insulated pipes conveying fluids below ambient temperature:
   1. Provide vapor barrier jackets, factory-applied or field-applied. Secure with self-sealing longitudinal laps and butt strips with pressure sensitive adhesive. Secure with outward clinch expanding staples and vapor barrier mastic.
   2. Insulate fittings, joints, and valves with molded insulation of like material and thickness as adjacent pipe. Finish with glass cloth and vapor barrier adhesive or PVC fitting covers.

F. For hot piping conveying fluids 140 degrees F or less, do not insulate flanges and unions at equipment, but bevel and seal ends of insulation.

G. For hot piping conveying fluids over 140 degrees F, insulate flanges and unions at equipment.

H. Glass fiber insulated pipes conveying fluids above ambient temperature:
   1. Provide standard jackets, with or without vapor barrier, factory-applied or field-applied. Secure with self-sealing longitudinal laps and butt strips with pressure sensitive adhesive. Secure with outward clinch expanding staples.
   2. Insulate fittings, joints, and valves with insulation of like material and thickness as adjoining pipe. Finish with glass cloth and adhesive or PVC fitting covers.

I. Inserts and Shields:
   1. Application: Piping 1-1/2 inches diameter or larger.
   2. Shields: Galvanized steel between pipe hangers or pipe hanger rolls and inserts.
   3. Insert location: Between support shield and piping and under the finish jacket.
   4. Insert configuration: Minimum 6 inches long, of same thickness and contour as adjoining insulation; may be factory fabricated.
   5. Insert material: Hydrous calcium silicate insulation or other heavy density insulating material suitable for the planned temperature range.

J. Continue insulation through walls, sleeves, pipe hangers, and other pipe penetrations. Finish at supports, protrusions, and interruptions. At fire separations, refer to Section 07 8400.

K. Exterior Applications: Provide vapor barrier jacket. Insulate fittings, joints, and valves with insulation of like material and thickness as adjoining pipe, and finish with glass mesh reinforced vapor barrier cement. Cover with aluminum jacket with seams located on bottom side of horizontal piping. Provide two coats of UV resistant finish for flexible elastomeric cellular insulation without jacketing.

L. Buried Piping: Provide factory fabricated assembly with inner all-purpose service jacket with self-sealing lap, and asphalt impregnated open mesh glass fabric, with one mil thick aluminum foil sandwiched between three layers of bituminous compound; outer surface faced with a polyester film.

3.03 SCHEDULE

A. Cooling Systems:
   1. Refrigerant Suction:

2. Refrigerant Hot Gas:

END OF SECTION

SECTION 23 0800
COMMISSIONING OF HVAC

PART 1 GENERAL

1.01 SUMMARY

A. See Section 01 9113 - General Commissioning Requirements for overall objectives; comply with the requirements of Section 01 9113.

B. This section covers the Contractor's responsibilities for commissioning; each subcontractor or installer responsible for the installation of a particular system or equipment item to be commissioned is responsible for the commissioning activities relating to that system or equipment item.

C. The Commissioning Authority (CA) directs and coordinates all commissioning activities and provides Prefunctional Checklists and Functional Test Procedures for Contractor's use.

D. The entire HVAC system is to be commissioned, including commissioning activities for the following specific items:
   1. Major and minor equipment items.
   2. Ductwork and accessories.
   3. Terminal units.
   4. Other equipment and systems explicitly identified elsewhere in Contract Documents as requiring commissioning.

E. The Prefunctional Checklist and Functional Test requirements specified in this section are in addition to, not a substitute for, inspection or testing specified in other sections.

1.02 RELATED REQUIREMENTS

A. Section 01 9113 - General Commissioning Requirements: Commissioning requirements that apply to all types of work.

B. Section 23 0593 - Testing, Adjusting, and Balancing for HVAC.

1.03 REFERENCE STANDARDS

A. ASHRAE Guideline 1.1 - The HVAC Commissioning Process; 2012

1.04 SUBMITTALS

A. Updated Submittals: Keep the Commissioning Authority informed of all changes to control system documentation made during programming and setup; revise and resubmit when substantial changes are made.

B. DRAFT Prefunctional Checklists and Functional Test Procedures for Control System: Detailed written plan indicating the procedures to be followed to test, checkout and adjust the control system prior to full system Functional Testing; include at least the following for each type of equipment controlled:
   1. System name.
   2. List of devices.
   3. Copy of proposed log and field checkout sheets to be used to document the process; include space for initial and final read values during calibration of each point and space to specifically indicate when a sensor or controller has “passed” and is operating within the contract parameters.
   4. Description of the instrumentation required for testing.
   5. Indicate what tests on what systems should be completed prior to TAB using the control system for TAB work. Coordinate with the Commissioning Authority and TAB contractor for this determination.

C. Startup Reports, Prefunctional Checklists, and Trend Logs: Submit for approval of Commissioning Authority.

D. HVAC Control System O&M Manual Requirements. In addition to documentation specified elsewhere, compile and organize at minimum the following data on the control system:

1. Specific step-by-step instructions on how to perform and apply all functions, features, modes, etc. mentioned in the controls training sections of this specification and other features of this system. Provide an index and clear table of contents. Include the detailed technical manual for programming and customizing control loops and algorithms.
2. Full as-built set of control drawings.
3. Full as-built sequence of operations for each piece of equipment.
4. Full points list; in addition to the information on the original points list submittal, include a listing of all rooms with the following information for each room:
   a. Room number.
   b. Room name.
   c. Air handler unit ID.
   d. Reference drawing number.
   e. Air terminal unit tag ID.
   f. Minimum air flow rate.
   g. Maximum air flow rate.
5. Marking of all system sensors and thermostats on the as-built floor plan and HVAC drawings with their control system designations.
6. Maintenance instructions, including sensor calibration requirements and methods by sensor type, etc.
7. Control equipment component submittals, parts lists, etc.
8. Warranty requirements.
9. Copies of all checkout tests and calibrations performed by the Contractor (not commissioning tests).

PART 3 EXECUTION

2.01 PREPARATION

A. Cooperate with the Commissioning Authority in development of the Prefunctional Checklists and Functional Test Procedures.

B. Furnish additional information requested by the Commissioning Authority.

C. Prepare a preliminary schedule for HVAC pipe and duct system testing, flushing and cleaning, equipment start-up and testing, adjusting, and balancing start and completion for use by the Commissioning Authority; update the schedule as appropriate.

D. Notify the Commissioning Authority when pipe and duct system testing, flushing, cleaning, startup of each piece of equipment and testing, adjusting, and balancing will occur; when commissioning activities not yet performed or not yet scheduled will delay construction notify ahead of time and be proactive in seeing that the Commissioning Authority has the scheduling information needed to efficiently execute the commissioning process.

E. Put all HVAC equipment and systems into operation and continue operation during each working day of testing, adjusting, and balancing and commissioning, as required.

F. Provide test holes in ducts and plenums where directed to allow air measurements and air balancing; close with an approved plug.

G. Provide temperature and pressure taps in accordance with the contract documents.

2.02 INSPECTING AND TESTING - GENERAL

A. Submit startup plans, startup reports, and Prefunctional Checklists for each item of equipment or other assembly to be commissioned.

B. Perform the Functional Tests directed by the Commissioning Authority for each item of equipment or other assembly to be commissioned.

C. Provide two-way radios for use during the testing.

D. Valve/Damper Stroke Setup and Check:
   1. For all valve/damper actuator positions checked, verify the actual position against the control system readout.

2. Command valve/damper closed; visually verify that valve/damper is closed and adjust output zero signal as required.
3. Command valve/damper open; verify position is full open and adjust output signal as required.
4. Command valve/damper to a few intermediate positions.
5. If actual valve/damper position does not reasonably correspond, replace actuator or add pilot positioner (for pneumatics).

E. Deficiencies: Correct deficiencies and re-inspect or re-test, as applicable, at no extra cost to Owner.

2.03 TAB COORDINATION

A. TAB: Testing, adjusting, and balancing of HVAC.

B. Review the TAB plan to determine the capabilities of the control system toward completing TAB.

C. Have all required Prefunctional Checklists, calibrations, startup and component Functional Tests of the system completed and approved by the Commissioning Authority prior to starting TAB.

2.04 CONTROL SYSTEM FUNCTIONAL TESTING

A. Prefunctional Checklists for control system components will require a signed and dated certification that all system programming is complete as required to accomplish the requirements of the Contract Documents and the detailed Sequences of Operation documentation submittal.

B. Do not start Functional Testing until all controlled components have themselves been successfully Functionally Tested in accordance with the contract documents.

C. Functionally Test integral or stand-alone controls in conjunction with the Functional Tests of the equipment they are attached to, including any interlocks with other equipment or systems; further testing during control system Functional Test is not required unless specifically indicated below.

D. Demonstrate to the Commissioning Authority:
1. That all specified functions and features are set up, debugged and fully operable.
2. Power failure and battery backup and power-up restart functions.
3. Global commands features.
4. Security and access codes.
5. Occupant over-rides (manual, telephone, key, keypad, etc.).
6. O&M schedules and alarms.
7. Occupancy sensors and controls.
8. All control strategies and sequences not tested during controlled equipment testing.

E. If the control system, integral control components, or related equipment do not respond to changing conditions and parameters appropriately as expected, as specified and according to acceptable operating practice, under any of the conditions, sequences, or modes tested, correct all systems, equipment, components, and software required at no additional cost to Owner.

2.05 OPERATION AND MAINTENANCE MANUALS

A. See Section 01 7800 for additional requirements.

B. Submit manuals related to items that were commissioned to Commissioning Authority for review; make changes recommended by Commissioning Authority.

C. Commissioning Authority will add commissioning records to manuals after submission to Owner.

END OF SECTION

SECTION 23 0913

INSTRUMENTATION AND CONTROL DEVICES FOR HVAC

PART 1 GENERAL

1.01 RELATED REQUIREMENTS

A. Section 26 2717 - Equipment Wiring: Electrical characteristics and wiring connections.

1.02 REFERENCE STANDARDS

A. NEMA DC 3 - Residential Controls - Electrical Wall-Mounted Room Thermostats; National Electrical Manufacturers Association; 2013.

B. NFPA 90A - Standard for the Installation of Air-Conditioning and Ventilation Systems; National Fire Protection Association; 2012.

1.03 SUBMITTALS

A. See Section 01 3000 - Administrative Requirements, for submittal procedures.

B. Product Data: Provide description and engineering data for each control system component. Include sizing as requested. Provide data for each system component and software module.

C. Manufacturer's Instructions: Provide for all manufactured components.

D. Operation and Maintenance Data: Include inspection period, cleaning methods, recommended cleaning materials, and calibration tolerances.

E. Warranty: Submit manufacturers warranty and ensure forms have been filled out in Owner s name and registered with manufacturer.

1.04 QUALITY ASSURANCE

A. Designer Qualifications: Design system under direct supervision of a Professional Engineer experienced in design of this work and licensed at the State in which the Project is located.

1.05 WARRANTY

A. See Section 01 7800 - Closeout Submittals, for additional warranty requirements.

PART 2 PRODUCTS

2.01 EQUIPMENT - GENERAL

A. Products Requiring Electrical Connection: Listed and classified by Underwriters Laboratories Inc., as suitable for the purpose specified and indicated.

2.02 THERMOSTATS

A. Line Voltage Thermostats:
   1. Integral manual On/Off/Auto selector switch, single or two pole as required.
   2. Dead band: Maximum 2 degrees F.
   3. Cover: Locking with set point adjustment, with thermometer.
   4. Rating: Motor load.
   5. Product:
      a. Substitutions: See Section 01 6000 - Product Requirements.

B. Room Thermostat Accessories:
   1. Thermostat Covers: Brushed aluminum.
   2. Insulating Bases: For thermostats located on exterior walls.
   3. Thermostat Guards: Metal mounted on separate base.
   4. Adjusting Key: As required for device.

PART 3 EXECUTION

3.01 EXAMINATION

A. Verify existing conditions before starting work.

B. Verify that systems are ready to receive work.

C. Beginning of installation means installer accepts existing conditions.

D. Sequence work to ensure installation of components is complementary to installation of similar components in other systems.

E. Coordinate installation of system components with installation of mechanical systems equipment such as air handling units and air terminal units.

F. Ensure installation of components is complementary to installation of similar components.

G. Coordinate installation of system components with installation of mechanical systems equipment such as air handling units and air terminal units.

3.02 INSTALLATION

A. Install in accordance with manufacturer's instructions.

B. Check and verify location of thermostats with plans and room details before installation. Locate 60 inches above floor. Align with lighting switches and humidistats. Refer to Section 26 2726.

C. Provide conduit and electrical wiring in accordance with Section 26 2717. Electrical material and installation shall be in accordance with appropriate requirements of Division 26.

3.03 MAINTENANCE

A. See Section 01 7000 - Execution Requirements, for additional requirements relating to maintenance service.

B. Provide complete service of controls systems, including call backs, and submit written report of each service call.

END OF SECTION

SECTION 23 2300
REFRIGERANT PIPING

PART 1 GENERAL

1.01 SECTION INCLUDES

A. Piping.

B. Refrigerant.

C. Moisture and liquid indicators.

D. Valves.

E. Strainers.

F. Check valves.

G. Filter-driers.

H. Flexible connections.

1.02 RELATED REQUIREMENTS

A. Section 08 3100 - Access Doors and Panels.

B. Section 26 2717 - Equipment Wiring: Electrical characteristics and wiring connections.

1.03 REFERENCE STANDARDS

A. ASHRAE Std 15 - Safety Standard for Refrigeration Systems; American Society of Heating, Refrigerating and Air-Conditioning Engineers, Inc.; 2013 (ANSI/ASHRAE Std 15).

B. ASME B16.22 - Wrought Copper and Copper Alloy Solder Joint Pressure Fittings; The American Society of Mechanical Engineers; 2013.

C. ASME B16.26 - Cast Copper Alloy Fittings For Flared Copper Tubes; The American Society of Mechanical Engineers; 2013.

D. ASME B31.5 - Refrigeration Piping and Heat Transfer Components; The American Society of Mechanical Engineers; 2013.

E. ASME B31.9 - Building Services Piping; The American Society of Mechanical Engineers; 2014 (ANSI/ASME B31.9).

F. ASTM B88 - Standard Specification for Seamless Copper Water Tube; 2009.

G. ASTM B88M - Standard Specification for Seamless Copper Water Tube (Metric); 2013.

H. ASTM B280 - Standard Specification for Seamless Copper Tube for Air Conditioning and Refrigeration Field Service; 2013.

I. AWS A5.8/A5.8M - Specification for Filler Metals for Brazing and Braze Welding; American Welding Society; 2011 and errata.

J. MSS SP-58 - Pipe Hangers and Supports - Materials, Design and Manufacture, Selection, Application, and Installation; Manufacturers Standardization Society of the Valve and Fittings Industry, Inc.; 2009.

1.04 SYSTEM DESCRIPTION

A. Provide pipe hangers and supports in accordance with ASME B31.5 unless indicated otherwise.

B. Valves:

C. Refrigerant Charging (Packed Angle) Valve: Use in liquid line between receiver shut-off valve and expansion valve.

D. Strainers:

E. Filter-Driers:

1. Use a filter-drier immediately ahead of liquid-line controls, such as thermostatic expansion valves, solenoid valves, and moisture indicators.

F. Flexible Connectors: Utilize at or near compressors where piping configuration does not absorb vibration.

1.05 SUBMITTALS

A. See Section 01 3000 - Administrative Requirements, for submittal procedures.

B. Product Data: Provide general assembly of specialties, including manufacturers catalogue information. Provide manufacturers catalog data including load capacity.

C. Shop Drawings: Indicate schematic layout of system, including equipment, critical dimensions, and sizes.

D. Design Data: Submit design data indicating pipe sizing. Indicate load carrying capacity of trapeze, multiple pipe, and riser support hangers.

E. Test Reports: Indicate results of leak test, acid test.

F. Manufacturer's Installation Instructions: Indicate support, connection requirements, and isolation for servicing.

G. Project Record Documents: Record exact locations of equipment and refrigeration accessories on record drawings.

H. Maintenance Data: Include instructions for changing cartridges, assembly views, spare parts lists.

I. Maintenance Materials: Furnish the following for Owner's use in maintenance of project.

1.06 QUALITY ASSURANCE

A. Designer Qualifications: Design piping system under direct supervision of a Professional Engineer experienced in design of this type of work.

1.07 REGULATORY REQUIREMENTS

A. Conform to ASME B31.9 for installation of piping system.

1.08 DELIVERY, STORAGE, AND HANDLING

A. Deliver and store piping and specialties in shipping containers with labeling in place.

B. Protect piping and specialties from entry of contaminating material by leaving end caps and plugs in place until installation.

C. Dehydrate and charge components such as piping and receivers, seal prior to shipment, until connected into system.

PART 2 PRODUCTS

2.01 PIPING

A. Copper Tube: ASTM B280, H58 hard drawn or O60 soft annealed.
   1. Fittings: ASME B16.22 wrought copper.
   2. Joints: Braze, AWS A5.8 BCuP silver/phosphorus/copper alloy.

B. Copper Tube to 7/8 inch OD: ASTM B88 (ASTM B88M), Type K (A), annealed.
   1. Fittings: ASME B16.26 cast copper.
   2. Joints: Flared.

C. Pipe Supports and Anchors:
   1. Provide hangers and supports that comply with MSS SP-58.
      a. If type of hanger or support for a particular situation is not indicated, select appropriate type using MSS SP-58 recommendations.
   2. Hangers for Pipe Sizes 2 Inches and Over: Carbon steel, adjustable, clevis.
   3. Multiple or Trapeze Hangers: Steel channels with welded spacers and hanger rods.
   4. Wall Support for Pipe Sizes to 3 Inches: Cast iron hook.
   5. Wall Support for Pipe Sizes 4 Inches and Over: Welded steel bracket and wrought steel clamp.
   6. Vertical Support: Steel riser clamp.

7. Floor Support: Cast iron adjustable pipe saddle, lock nut, nipple, floor flange, and concrete pier or steel support.
8. Copper Pipe Support: Carbon steel ring, adjustable, copper plated.
9. Hanger Rods: Mild steel threaded both ends, threaded one end, or continuous threaded.
10. Inserts: Malleable iron case of galvanized steel shell and expander plug for threaded connection with lateral adjustment, top slot for reinforcing rods, lugs for attaching to forms; size inserts to suit threaded hanger rods.

2.02 REFRIGERANT

2.03 MOISTURE AND LIQUID INDICATORS

2.04 VALVES

2.05 STRAINERS

2.06 FILTER-DRIERS

A. Performance:
   1. Pressure Drop: 2 psi, maximum, when operating at full connected evaporator capacity.
   2. Design Working Pressure: 350 psi, minimum.

B. Cores: Molded or loose-fill molecular sieve desiccant compatible with refrigerant, activated alumina, activated charcoal, and filtration to 40 microns, with secondary filtration to 20 microns; of construction that will not pass into refrigerant lines.

C. Construction: UL listed.
   1. Connections: As specified for applicable pipe type.

2.07 FLEXIBLE CONNECTORS

A. Manufacturers:
   1. Circuit Hydraulics, Ltd: www.circuit-hydraulics.co.uk.
   2. Flexicraft Industries: www.flexicraft.com.
   3. Penflex: www.penflex.com.
   4. Substitutions: See Section 01 6000 - Product Requirements.

PART 3 EXECUTION

3.01 INSTALLATION

A. Install refrigeration specialties in accordance with manufacturer's instructions.

B. Route piping in orderly manner, with plumbing parallel to building structure, and maintain gradient.

C. Install piping to conserve building space and avoid interference with use of space.

D. Group piping whenever practical at common elevations and locations. Slope piping one percent in direction of oil return.

E. Install piping to allow for expansion and contraction without stressing pipe, joints, or connected equipment.

F. Pipe Hangers and Supports:
   1. Install in accordance with ASME B31.5.
   2. Support horizontal piping as scheduled.
   3. Install hangers to provide minimum 1/2 inch space between finished covering and adjacent work.
   4. Place hangers within 12 inches of each horizontal elbow.
   5. Where several pipes can be installed in parallel and at same elevation, provide multiple or trapeze hangers.
   6. Provide copper plated hangers and supports for copper piping.

G. Provide clearance for installation of insulation and access to valves and fittings.

H. Provide access to concealed valves and fittings. Coordinate size and location of access doors with Section 08 3100.

I. Flood piping system with nitrogen when brazing.

J. Where pipe support members are welded to structural building frame, brush clean, and apply one coat of zinc rich primer to welding.

K. Insulate piping and equipment; refer to Section and Section 22 0716.

L. Follow ASHRAE Std 15 procedures for charging and purging of systems and for disposal of refrigerant.

M. Provide replaceable cartridge filter-driers, with isolation valves and valved bypass.

N. Locate expansion valve sensing bulb immediately downstream of evaporator on suction line.

O. Fully charge completed system with refrigerant after testing.

P. Provide electrical connection to solenoid valves. Refer to Section 26 2717.

3.02 FIELD QUALITY CONTROL

A. Test refrigeration system in accordance with ASME B31.5.

B. Pressure test system with dry nitrogen to 200 psi. Perform final tests at 27 inches vacuum and 200 psi using halide torch. Test to no leakage.

3.03 SCHEDULES

A. Hanger Spacing for Copper Tubing.

1. 1/2 inch, 5/8 inch, and 7/8 inch OD: Maximum span, 5 feet; minimum rod size, 1/4 inch.

END OF SECTION

SECTION 23 3100
HVAC DUCTS AND CASINGS

PART 1 GENERAL

1.01 SECTION INCLUDES

A. Metal ductwork.

B. Duct cleaning.

1.02 RELATED REQUIREMENTS

A. Section 23 0130.51 - HVAC Air Duct Cleaning: Cleaning ducts after completion of installation.

B. Section 23 0593 - Testing, Adjusting, and Balancing for HVAC.

C. Section 23 0713 - Duct Insulation: External insulation and duct liner.

D. Section 23 3300 - Air Duct Accessories.

E. Section 23 3700 - Air Outlets and Inlets.

F. Section 23 0593 - Testing, Adjusting, and Balancing for HVAC.

1.03 REFERENCE STANDARDS

A. ASTM A653/A653M - Standard Specification for Steel Sheet, Zinc-Coated (Galvanized) or Zinc-Iron Alloy-Coated (Galvannealed) by the Hot-Dip Process; 2013.

B. ASTM E84 - Standard Test Method for Surface Burning Characteristics of Building Materials; 2014.

C. NFPA 90A - Standard for the Installation of Air-Conditioning and Ventilating Systems; National Fire Protection Association; 2012.

D. SMACNA (DCS) - HVAC Duct Construction Standards; Sheet Metal and Air Conditioning Contractors' National Association; 2005.

E. SMACNA (LEAK) - HVAC Air Duct Leakage Test Manual; Sheet Metal and Air Conditioning Contractors' National Association; 2012, 2nd Edition.

1.04 SUBMITTALS

A. See Section 01 3000 - Administrative Requirements, for submittal procedures.

B. Product Data: Provide data for duct materials.

C. Manufacturer's Installation Instructions: Indicate special procedures for glass fiber ducts.

1.05 QUALITY ASSURANCE

A. Manufacturer Qualifications: Company specializing in manufacturing the type of products specified in this section, with minimum three years of documented experience, and approved by manufacturer.

1.06 FIELD CONDITIONS

A. Do not install duct sealants when temperatures are less than those recommended by sealant manufacturers.

B. Maintain temperatures within acceptable range during and after installation of duct sealants.

PART 2 PRODUCTS

2.01 DUCT ASSEMBLIES

A. Regulatory Requirements: Construct ductwork to NFPA 90A standards.

2.02 MATERIALS

A. Galvanized Steel for Ducts: Hot-dipped galvanized steel sheet, ASTM A653/A653M FS Type B, with G60/Z180 coating.

B. Joint Sealers and Sealants: Non-hardening, water resistant, mildew and mold resistant.

1. Type: Heavy mastic or liquid used alone or with tape, suitable for joint configuration and compatible with substrates, and recommended by manufacturer for pressure class of ducts.
2. Surface Burning Characteristics: Flame spread of zero, smoke developed of zero, when tested in accordance with ASTM E84.

2.03 DUCTWORK FABRICATION

A. Fabricate and support in accordance with SMACNA (DCS) and as indicated.

B. Provide duct material, gages, reinforcing, and sealing for operating pressures indicated.

C. Increase duct sizes gradually, not exceeding 15 degrees divergence wherever possible; maximum 30 degrees divergence upstream of equipment and 45 degrees convergence downstream.

D. Fabricate continuously welded round and oval duct fittings in accordance with SMACNA (DCS).

2.04 MANUFACTURED DUCTWORK AND FITTINGS

A. Flexible Ducts: Two ply vinyl film supported by helically wound spring steel wire.
1. Pressure Rating: 10 inches WG positive and 1.0 inches WG negative.
2. Maximum Velocity: 4000 fpm.
3. Temperature Range: Minus 10 degrees F to 160 degrees F.

END OF SECTION

SECTION 23 3300
AIR DUCT ACCESSORIES

PART 1 GENERAL

1.01 SUBMITTALS

A. Product Data: Provide for shop fabricated assemblies including volume control dampers. Include electrical characteristics and connection requirements.

PART 2 PRODUCTS

2.01 BACKDRAFT DAMPERS - METAL

2.02 DUCT TEST HOLES

A. Temporary Test Holes: Cut or drill in ducts as required. Cap with neat patches, neoprene plugs, threaded plugs, or threaded or twist-on metal caps.

B. Permanent Test Holes: Factory fabricated, air tight flanged fittings with screw cap. Provide extended neck fittings to clear insulation.

2.03 FIRE DAMPERS

2.04 FLEXIBLE DUCT CONNECTIONS

A. Fabricate in accordance with SMACNA (DCS) and as indicated.

B. Flexible Duct Connections: Fabric crimped into metal edging strip.

2.05 VOLUME CONTROL DAMPERS

A. Single Blade Dampers: Fabricate for duct sizes up to 6 x 30 inch.
   1. Fabricate for duct sizes up to 6 x 30 inch.
   2. Blade: 24 gage, 0.0239 inch, minimum.

B. Multi-Blade Damper: Fabricate of opposed blade pattern with maximum blade sizes 8 x 72 inch. Assemble center and edge crimped blades in prime coated or galvanized channel frame with suitable hardware.
   1. Blade: 18 gage, 0.0478 inch, minimum.

C. End Bearings: Except in round ducts 12 inches and smaller, provide end bearings. On multiple blade dampers, provide oil-impregnated nylon, thermoplastic elastomer, or sintered bronze bearings.

D. Quadrants:
   1. Provide locking, indicating quadrant regulators on single and multi-blade dampers.

2.06 MISCELLANEOUS PRODUCTS

A. Internal Strut End Plugs: Combination end-mounting and sealing plugs for metal conduit used as internal reinforcement struts for metal ducts; plug crimped inside conduit with outside gasketed washer seal.

B. Duct Opening Closure Film: Mold-resistant, self-adhesive film to keep debris out of ducts during construction.
   1. Thickness: 2 mils.

END OF SECTION

SECTION 23 3300
AIR DUCT ACCESSORIES

PART 1 GENERAL

1.01 SECTION INCLUDES

A. Backdraft dampers - metal.

B. Duct test holes.

C. Fire dampers.

D. Flexible duct connections.

E. Volume control dampers.

1.02 RELATED REQUIREMENTS

A. Section 23 3100 - HVAC Ducts and Casings.

B. Section 23 3600 - Air Terminal Units: Pressure regulating damper assemblies.

1.03 REFERENCE STANDARDS

A. NFPA 90A - Standard for the Installation of Air-Conditioning and Ventilating Systems; National Fire Protection Association; 2012.

B. SMACNA (DCS) - HVAC Duct Construction Standards; 2005.

1.04 SUBMITTALS

A. See Section 01 3000 - Administrative Requirements, for submittal procedures.

B. Product Data: Provide for shop fabricated assemblies including volume control dampers. Include electrical characteristics and connection requirements.

C. Manufacturer's Installation Instructions: Provide instructions for fire dampers.

1.05 QUALITY ASSURANCE

A. Manufacturer Qualifications: Company specializing in manufacturing the type of products specified in this section, with minimum three years of documented experience.

B. Products Requiring Electrical Connection: Listed and classified by Underwriters Laboratories Inc. as suitable for the purpose specified and indicated.

1.06 DELIVERY, STORAGE, AND HANDLING

A. Protect dampers from damage to operating linkages and blades.

PART 2 PRODUCTS

2.01 BACKDRAFT DAMPERS - METAL

2.02 DUCT TEST HOLES

A. Temporary Test Holes: Cut or drill in ducts as required. Cap with neat patches, neoprene plugs, threaded plugs, or threaded or twist-on metal caps.

B. Permanent Test Holes: Factory fabricated, air tight flanged fittings with screw cap. Provide extended neck fittings to clear insulation.

2.03 FIRE DAMPERS

2.04 FLEXIBLE DUCT CONNECTIONS

A. Fabricate in accordance with SMACNA (DCS) and as indicated.

B. Flexible Duct Connections: Fabric crimped into metal edging strip.

2.05 VOLUME CONTROL DAMPERS

A. Single Blade Dampers: Fabricate for duct sizes up to 6 x 30 inch.
   1. Fabricate for duct sizes up to 6 x 30 inch.
   2. Blade: 24 gage, 0.0239 inch, minimum.

B. Multi-Blade Damper: Fabricate of opposed blade pattern with maximum blade sizes 8 x 72 inch. Assemble center and edge crimped blades in prime coated or galvanized channel frame with suitable hardware.
   1. Blade: 18 gage, 0.0478 inch, minimum.

C. End Bearings: Except in round ducts 12 inches and smaller, provide end bearings. On multiple blade dampers, provide oil-impregnated nylon, thermoplastic elastomer, or sintered bronze bearings.

D. Quadrants:
   1. Provide locking, indicating quadrant regulators on single and multi-blade dampers.

2.06 MISCELLANEOUS PRODUCTS

A. Internal Strut End Plugs: Combination end-mounting and sealing plugs for metal conduit used as internal reinforcement struts for metal ducts; plug crimped inside conduit with outside gasketed washer seal.

B. Duct Opening Closure Film: Mold-resistant, self-adhesive film to keep debris out of ducts during construction.
   1. Thickness: 2 mils.

END OF SECTION

SECTION 23 3423
HVAC POWER VENTILATORS

PART 1 GENERAL

1.01 SECTION INCLUDES

A. Roof exhausters.

1.02 RELATED REQUIREMENTS

A. Section 22 0548 - Vibration and Seismic Controls for Plumbing Piping and Equipment.

B. Section 23 0513 - Common Motor Requirements for HVAC Equipment.

C. Section 23 3300 - Air Duct Accessories: Backdraft dampers.

1.03 SUBMITTALS

A. See Section 01 3000 - Administrative Requirements, for submittal procedures.

B. Product Data: Provide data on fans and accessories including fan curves with specified operating point clearly plotted, power, RPM, sound power levels at rated capacity, and electrical characteristics and connection requirements.

C. Manufacturer's Instructions: Indicate installation instructions.

D. Maintenance Data: Include instructions for lubrication, motor and drive replacement, spare parts list, and wiring diagrams.

1.04 QUALITY ASSURANCE

1.05 FIELD CONDITIONS

A. Permanent ventilators may not be used for ventilation during construction.

PART 2 PRODUCTS

2.01 MANUFACTURERS

A. Greenheck; Model _____: www.greenheck.com.

B. Loren Cook Company; Model _____: www.lorencook.com.

C. PennBarry; Model _____: www.pennbarry.com.

2.02 POWER VENTILATORS - GENERAL

A. Static and Dynamically Balanced: AMCA 204 - Balance Quality and Vibration Levels for Fans.

B. Performance Ratings: Determined in accordance with AMCA 210 and bearing the AMCA Certified Rating Seal.

C. Sound Ratings: AMCA 301, tested to AMCA 300, and bearing AMCA Certified Sound Rating Seal.

D. Fabrication: Conform to AMCA 99.

E. UL Compliance: UL listed and labeled, designed, manufactured, and tested in accordance with UL 705.

F. Electrical Components: Listed and classified by Underwriters Laboratories Inc. as suitable for the purpose specified and indicated.

2.03 ROOF EXHAUSTERS

A. Performance Ratings:

B. Roof Curb: 8 inch high self-flashing of galvanized steel with continuously welded seams, built-in cant strips.

C. Disconnect Switch: Factory wired, non-fusible, in housing for thermal overload protected motor and wall mounted multiple speed switch.

D. Backdraft Damper: Gravity actuated, aluminum multiple blade construction, felt edged with offset hinge pin, nylon bearings, blades linked, and line voltage motor drive, power open, spring return.

PART 3 EXECUTION

3.01 INSTALLATION

A. Install in accordance with manufacturer's instructions.

B. Secure roof exhausters with cadmium plated steel lag screws to roof curb.

C. Extend ducts to roof exhausters into roof curb. Counterflash duct to roof opening.

D. Hung Cabinet Fans:
   1. Install fans with resilient mountings and flexible electrical leads. Refer to Section 22 0548.
   2. Install flexible connections specified in Section 23 3300 between fan and ductwork. Ensure metal bands of connectors are parallel with minimum one inch flex between ductwork and fan while running.

E. Provide backdraft dampers on outlet from cabinet and ceiling exhauster fans and as indicated.

3.02 SCHEDULES

A. Drawing Code:

B. Manufacturer:

C. Model:

D. Fan Type:

E. Hood/Housing:

F. Air Flow Capacity:

G. Static Pressure:

H. Drive:

I. Fan Tip Speed:

J. Fan RPM:

K. Motor hp:
   1. Electrical Characteristics:

L. Sound (Sones):

M. Accessories:
   1. Curb Size:
   2. Damper Size:

END OF SECTION

SECTION 23 3700
AIR OUTLETS AND INLETS

PART 1 GENERAL

1.01 SECTION INCLUDES

A. Diffusers.

B. Registers/grilles.

1.02 RELATED REQUIREMENTS

A. Section 09 9123 - Interior Painting: Painting of ducts visible behind outlets and inlets.

1.03 REFERENCE STANDARDS

A. ASHRAE Std 70 - Method of Testing the Performance of Air Outlets and Inlets; American Society of Heating, Refrigerating and Air Conditioning Engineers, Inc.; 2006 (R2011).

B. SMACNA (DCS) - HVAC Duct Construction Standards; 2005.

1.04 SUBMITTALS

A. See Section 01 3000 - Administrative Requirements for submittal procedures.

B. Product Data: Provide data for equipment required for this project. Review outlets and inlets as to size, finish, and type of mounting prior to submission. Submit schedule of outlets and inlets showing type, size, location, application, and noise level.

1.05 QUALITY ASSURANCE

A. Test and rate air outlet and inlet performance in accordance with ASHRAE Std 70.

1.06 QUALITY ASSURANCE

A. Manufacturer Qualifications: Company specializing in manufacturing the type of products specified in this section, with minimum three years of documented experience.

PART 2 PRODUCTS

2.01 MANUFACTURERS

A. American Louver Company; ALC Grilles and Registers: www.americanlouver.com.

B. Carnes Company HVAC: www.carnes.com.

C. Hart & Cooley, Inc: www.hartandcooley.com.

D. Krueger: www.krueger-hvac.com.

E. Price Industries: www.price-hvac.com.

F. Titus: www.titus-hvac.com.

2.02 RECTANGULAR CEILING DIFFUSERS

A. Type: Provide square, stamped, multi-core diffuser to discharge air in four way pattern .

B. Connections: Round.

C. Frame: Provide inverted T-bar type. In plaster ceilings, provide plaster frame and ceiling frame.

D. Fabrication: Steel with baked enamel finish.

E. Accessories: Provide butterfly volume control damper; removable core with damper adjustable from diffuser face.

2.03 CEILING EGG CRATE EXHAUST AND RETURN GRILLES

A. Type: Egg crate style face consisting of 1/2 x 1/2 x 1/2 inch, 1/2 x 1/2 x 1 inch, 1 x 1 x 1 inch, and _____ grid core.

B. Fabrication: Grid core consists of aluminum with mill aluminum finish.

C. Frame: 1-1/4 inch margin with countersunk screw mounting.

D. Frame: Channel lay-in frame for suspended grid ceilings.

PART 3 EXECUTION

3.01 INSTALLATION

A. Install in accordance with manufacturer's instructions.

B. Check location of outlets and inlets and make necessary adjustments in position to conform with architectural features, symmetry, and lighting arrangement.

C. Install diffusers to ductwork with air tight connection.

D. Provide balancing dampers on duct take-off to diffusers, and grilles and registers, despite whether dampers are specified as part of the diffuser, or grille and register assembly.

E. Paint ductwork visible behind air outlets and inlets matte black. Refer to Section 09 9123.

3.02 SCHEDULES

3.03 AIR OUTLET AND INLET SCHEDULE

A. Drawing Code:

B. Manufacturer

C. Model

D. Description

E. Finish

F. Service

G. Mounting

H. Accessories

END OF SECTION

SECTION 23 8127

SMALL SPLIT-SYSTEM HEATING AND COOLING

PART 2 PRODUCTS

1.01 SYSTEM DESIGN

A. Performance Requirements: See Drawings for additional requirements.

1.02 INDOOR UNITS FOR DUCTED SYSTEMS

A. Indoor Units: Self-contained, packaged, factory assembled, pre-wired unit consisting of cabinet, supply fan, heating and cooling element(s), controls, and accessories; wired for single power connection with control transformer.
   1. Air Flow Configuration: Upflow.
   2. Cabinet: Steel with baked enamel finish, easily removed and secured access doors with safety interlock switches, glass fiber insulation with reflective liner.

B. Supply Fan: Centrifugal type rubber mounted with direct or belt drive with adjustable variable pitch motor pulley.
   1. Motor: NEMA MG 1; 1750 rpm single speed, permanently lubricated, hinge mounted.
   2. Motor Electrical Characteristics:

C. Air Filters: 1 inch thick urethane, washable type arranged for easy replacement.

D. Evaporator Coils: Copper tube aluminum fin assembly, galvanized or polymer drain pan sloped in all directions to drain, drain connection, refrigerant piping connections, restricted distributor or thermostatic expansion valve.
   1. Construction and Ratings: In accordance with AHRI 210/240 and UL 207.
   2. Manufacturers: System manufacturer.

1.03 OUTDOOR UNITS

A. Outdoor Units: Self-contained, packaged, pre-wired unit consisting of cabinet, with compressor and condenser.
   1. Comply with AHRI 210.
   2. Refrigerant: Use only refrigerants that have ozone depletion potential (ODP) of zero and global warming potential (GWP) of less than 50.
   3. Refrigerant: R-410A.
   4. Construction and Ratings: In accordance with AHRI 210/240 with testing in accordance with ASHRAE Std 23.1 and UL 207.
   5. Sound Rating: 69 dBA, when measured in accordance with AHRI 270.

B. Compressor: AHRI 520; hermetic, two speed 1800 and 3600 rpm, resiliently mounted integral with condenser, with positive lubrication, crankcase heater, high pressure control, motor overload protection, service valves and drier. Provide time delay control to prevent short cycling and rapid speed changes.

C. Air Cooled Condenser: ARI 520; Aluminum fin and copper tube coil, with direct drive axial propeller fan resiliently mounted, galvanized fan guard.
   1. Condenser Fans: Direct-drive propeller type.
   2. Condenser Fan Motor: Enclosed, 1-phase type, permanently lubricated.

D. Coil: Air-cooled, aluminum fins bonded to copper tubes.

E. Accessories: Filter drier, high pressure switch (manual reset), low pressure switch (automatic reset), service valves and gage ports, thermometer well (in liquid line).
   1. Provide thermostatic expansion valves.

F. Operating Controls:
   1. Control by room thermostat to maintain room temperature setting.
   2. Low Ambient Kit: Provide refrigerant pressure switch to cycle condenser fan on when condenser refrigerant pressure is above 285 psig and off when pressure drops below 140 psig for operation to 0 degrees F.

G. Mounting Pad: Precast concrete parking bumpers, minimum 4 inches square; minimum of two located under cabinet feet.

1.04 GAS FURNACE COMPONENTS

A. Heat Exchanger: Aluminized steel ceramic coated clamshell type welded construction.

B. Insulation: Foil-faced.

C. Burner: Atmospheric type with adjustable combustion air supply,
   1. Gas valve, two stage provides 100 percent safety gas shut-off; 24 volt combining pressure regulation, safety pilot, manual set (On-Off), pilot filtration, automatic electric valve.
   2. Combustion air damper with synchronous spring return damper motor.
   3. Non-corrosive combustion air blower with permanently lubricated motor.

D. Burner Safety Controls:
   1. Thermocouple Sensor: Prevents opening of gas valve until pilot flame is proven and stops gas flow on ignition failure.
   2. Flame Rollout Switch: Installed on burner box and prevents operation.
   3. Vent Safety Shutoff Sensor: Temperature sensor installed on draft hood and prevents operation, manual reset.
   4. Limit Control: Fixed stop at maximum permissible setting, de-energizes burner on excessive bonnet temperature, automatic resets.

E. Operating Controls:
   1. Cycle burner by room thermostat to maintain room temperature setting.
   2. Supply fan energized from bonnet temperature independent of burner controls, with adjustable timed off delay and fixed timed on delay, with manual switch for continuous fan operation.

1.05 ACCESSORY EQUIPMENT

A. Economizer Damper Units: Steel cabinet with baked enamel finish, easily removed and secured access doors, glass fiber insulation.
   1. Dampers: Formed steel with nylon bearings and gaskets.
   2. Damper Operator: 24 volt, three position spring return motor with adjustable minimum position switch.
   3. Control Wiring: Provide wiring harness consisting of control board with relays, wiring harness, transformer, and hardware.
   4. Controls: Discharge air thermostat, adjustable outdoor air "enthalpy" control, return air "enthalpy" sensor position dampers, and interface to room thermostat.

B. Room Thermostat: Wall-mounted, electric solid state microcomputer based room thermostat with remote sensor to maintain temperature setting; low-voltage; with following features:
   1. System selector switch (heat-off-cool) and fan control switch (auto-on).
   2. Automatic switching from heating to cooling.
   3. Preferential rate control to minimize overshoot and deviation from setpoint.
   4. Battery replacement without program loss.
   5. Thermostat display:
      a. Time of day.
      b. Actual room temperature.
      c. Programmed temperature.
      d. Programmed time.
      e. Day of week.
      f. System mode indication: heating, cooling, fan auto, off, and on, auto or on, off.

PART 3 EXECUTION

2.01 EXAMINATION

A. Verify that substrates are ready for installation of units and openings are as indicated on shop drawings.

B. Verify that proper power supply is available and in correct location.

C. Verify that proper fuel supply is available for connection.

2.02 INSTALLATION

A. Install in accordance with manufacturer's instructions and requirements of local authorities having jurisdiction.

B. Install in accordance with NFPA 90A and NFPA 90B.

C. Install gas fired furnaces in accordance with NFPA 54.

D. Provide vent connections in accordance with NFPA 211.

END OF SECTION

WILSON
&COMPANY

INVITATION FOR BIDS

THE COUNTY OF OTERO IS REQUESTING COMPETITIVE SEALED BIDS FOR THE FOLLOWING GOODS OR SERVICES:

TITLE: **BAY DOORS, EOC BUILDING**
BID NO.: **16-008**
OPEN: **THURSDAY OCTOBER, 22, 2015 AT 3:00 P.M. (local time)**

FOR ADDITIONAL INFORMATION CONTACT:

GINGER HERNDON PURCHASING AGENT
PHONE: (575) 434-0710 EMAIL: gherndon@co.otero.nm.us

THE OFFICE OF THE PURCHASING AGENT, COUNTY OF OTERO WILL RECEIVE COMPETITIVE SEALED BIDS FOR THE GOODS OR SERVICES DESCRIBED IN THIS BID AT:

VIA MAIL	**HAND CARRIED**
OTERO COUNTY PURCHASING	OFFICE OF THE PURCHASING AGENT
1101 NEW YORK AVE. ROOM 118	1101 NEW YORK AVE., ROOM 118
ALAMOGORDO, NM 88310	ALAMOGORDO, NM 88310

ANY BIDS RECEIVED AFTER BID OPENING DATE/TIME WILL BE RETURNED UNOPENED

PROJECT DESCRIPTION

EOC Building is located at 1108 US HWY 70, Alamogordo, NM. Bay doors #1 and #3 will be need to be constructed and installed. Would be in the contractors' best interest to visit the job site prior bidding

CONTRACTORS RESPONSIBILITY

The Contractor, at all times, shall keep the premises free from accumulation of waste, materials, or rubbish caused by his operations. At the completion of the work, he shall remove all his waste materials and rubbish from and about the project as well as all his tools, construction equipment, machinery and surplus materials.

The awarded contractor will be responsible for location of utilities to include but not limited to power, water sewer, gas telephone, and other cables. Repairs of any damage caused by work on this contract are the sole responsibility of the contractor.

BID SPECIFICATIONS

I. **Door Construction**

a. Polyurethane injected
b. Thermally Broken Sections
c. R-Value: 19.40 min

II. **Panel Construction**

a. Bottom 2 panels are upgraded to 20 gage front
b. Include double end styles and hinges 3" long and 3" roof pitch track with continues angle track mounts.

III. **Additional Requirements**

a. Springs to be 50,000 cycles or higher on solid keyed shaft
b. Provide minimum of 1 strut installed on each panel section of the door
c. Provide weather-strip on sides and top of each door.

IV. **Opener**

a. Provide ¾ HP with solenoid brake.
b. Electric service to be 110/120 volt with 24V wire for controls and safety edge (run in conduit)
c. 3 button wall switch
d. Provide safety edge: Photo sensor and

Alter existing metal building framing to accommodate new section doors. Provide additional framing for head, jamb, and sectional door mounting supports. Include adjustment of exterior metal wall panels and slope drive access to the new door locations.

COUNTY OF OTERO
INVITATION FOR BIDS

GENERAL INSTRUCTIONS, TERMS AND CONDITIONS

IMPORTANT: **READ CAREFULLY BEFORE SUBMITTING BIDS. FAILURE TO DO SO SHALL NOT ABSOLVE THE BIDDER FROM RESPONSIBILITY TO PERFORM OR DELIVER AS SPECIFIED.**

1. APPLICABILITY: Except as otherwise specifically provided in this bid, these General Instructions, Terms and Conditions shall govern the procurement of the items specified in this bid. In the event of a conflict between these General Instructions, Terms and Conditions, Supplemental Conditions or the specifications of this bid, the order of application shall be the Specifications, Supplemental Conditions and the General Instructions, Terms and Conditions. In addition, the Public Purchases Ordinance and promulgated Rules and Regulations shall apply.

2. DEFINITIONS: As used in this bid, the definitions of the Public Purchases Ordinance apply including the following.

A. **"Bid"** means all documents, including those attached or incorporated by reference, issued by the Purchasing Department for soliciting offers to provide goods, services or construction.

B. **"Contract"** means any agreement for the procurement of goods, services, construction or concessions. A Purchase Order issued in response to an offer constitutes a contract.

C. **"Contractor"** means an offerer who has been awarded a contract.

D. **"County"** means the County of Otero, New Mexico.

E. **"Purchase Order"** means a document issued by the Purchasing Office directing the Contractor to deliver goods, services or construction.

F. **"Purchasing Office"** means the Purchasing Department of the Office of the Manager of the County

G. **"Purchasing Agent"** means the person charged with the responsibility of administering the Department.

H. **"Bidder"** means a business that submits a response to a competitive solicitation.

E. Payment Terms: Terms of less than thirty (30) days will not be considered. The term shall not begin until the goods, services or construction have been delivered and accepted and the correct invoice received in the County Accounts Payable Office.

F. Freight Policy: Freight will be F.O.B. Destination (As indicated on the Invitation for Bids form), Freight Prepaid, unless otherwise specified in this Bid.

G. Taxes: Bidders shall not include any applicable gross receipts taxes in its offered price, unless specified otherwise in this bid, and such offer will be construed in the manner. Applicable taxes are to be included in each invoice due and may not be billed more than sixty (60) days after providing the services to which the taxes apply.

H. New Material, Etc.: All materials, supplies, equipment, and vehicles specified in this Bid shall be new, the latest in production and manufactured within the last twelve (12) months (computed from the date and time of offer opening) unless otherwise indicated. This does not apply to materials, supplies, equipment or vehicles used by the Contractor to provide the required items of tangible personal property, services or construction.

I. Warranty: Materials furnished by the successful bidder shall be accompanied by the manufacturer's written warranty against defects in quality, craftsmanship, and materials.

The bidder agrees that the items of tangible personal property, services or construction furnished under any contract resulting from this bid shall be covered by the most favorable commercial warranties the bidder gives to any customer for such items. Further, the bidder agrees that the rights and remedies provided in such warranties extend to the County and are in addition to and do not limit any rights afforded to the County by any other clause of this bid. The bidder agrees not to disclaim warranties of fitness for a particular purpose of merchantability. Warranties shall become effective at the time of acceptance.

J. Indemnity: The bidder to whom an award has been made as a result of this bid expressly agrees to defend, indemnify and save harmless the County and its officer, agents and employees from and against any and all claims, suits, demands, actions, or proceedings of every nature and description brought because of any injury or damage received or sustained by any person, persons, or property arising out of the bidder's providing the goods, services for construction pursuant to the bid or by reason of any act or omission, neglect or misconduct of the bidder, the agents, employees or subcontractors of the bidder or the agents or employees of any subcontractor of the bidder. The indemnity required herein shall not be limited by reason of the specification of any particular insurance coverage

K. Public Inspection: Each bid shall be open to public inspection, except to the extent the bidder designates trade secrets or other proprietary data to be confidential. Material so designated shall accompany the bid and each page shall be clearly marked and readily separable from the bid in order to facilitate public inspection of the non-confidential portion of the bid. Prices and makes and models or catalog numbers of the items offered, deliveries and terms of payment shall be publicly available at the time of the opening of the bid regardless of any designation to the contrary. The County shall endeavor to restrict distribution of the material designated as confidential to only those individuals involved in the review and analysis of the bids. Bidders are

cautioned that materials designated confidential may nevertheless be subject to disclosure to any New Mexico citizen under the Inspection of Public Records Act (Sections 14-2-1 through 14-2-3 N.M.S.A. 1978)

L. Material Safety Data Sheets: To comply with the Occupational Health and Safety Regulation 1910.1200 for general standards on handling hazardous materials, material safety data sheets may be required for all or part of the products included on this bid. It is the responsibility of the bidder to make this determination and, if required, a copy of the MSDS must accompany the product when delivered to the end user. Failure to comply with this requirement may cause the delivery of products to be rejected and all costs related to such action to be borne by the bidder.

3. **ETHICAL CONDUCT**:

By submitting its bid in response to this invitation, the bidder certifies that:

A. It has not offered, given or agreed to give to any County employee or former employee, a gratuity or offer of employment to influence the preparation of or recommendation of award of this bid;

B. It has not retained a person or solicited or secured a County Contract for a contingent fee;

C. It has not taken any action in restraint of free competitive bidding in connection with this bid;

D. It has not in any way violated the ethical conduct or other provisions of the County's Public Purchases Ordinance; and

E. It currently has no interest and shall not acquire any interest, direct or indirect, which would conflict in any manner or degree with its performance of any contract resulting from this bid.

4. **ADDENDA:**

Addenda: Changes or amendments to specifications, conditions or provisions herein may be initiated ONLY through the Purchasing Department in the form of a written addendum.

Any addenda shall become a part of this bid and should be acknowledged either by being signed and returned with the bid or through letter that arrives prior to the opening of the bid. Failure to do so may result in disqualification of the bid.

It is the responsibility of all vendors considering making a bid in response to this invitation to ensure that they have received all addenda prior to making a bid. Bidders may contact the Purchasing Department to obtain information regarding any addenda issued. Failure to obtain an addendum shall not be grounds for overturning a recommendation of award.

5. **CLARIFICATION OF BIDS:**

The County may, in the evaluation of bids, request clarification from bidders regarding their bid, obtain additional material or literature, and pursue other avenues of research as necessary to insure that a thorough evaluation is conducted.

6. **INQUIRIES OR REQUEST REGARDING CLARIFICATION:**

Any request or inquiries regarding clarification of this procurement document shall be submitted to the Purchasing Agent in writing. Bidders **MAY NOT** contract other Otero County Departments, Otero County Manager, or his or her staff, members of the Otero County Board of County Commissioners or their staff and any other Otero County Elected Official or their staff regarding inquires or requests regarding clarification to this IFB. Violation of this policy may lead to disqualification. Bidders may contact **ONLY** the Purchasing Agent regarding the terminology state in the procurement documents. Other County employees do not have the authority to respond on behalf of the County Bidders should promptly notify the County Purchasing Agent of any ambiguity, inconsistency, or error which they may discover upon examination of the IFB. Any response made by the County will be provided in writhing by addendum. No verbal responses shall be authoritative. No Addendum will be issued later than three (3) days prior to the date of receipt of bids, except an addendum withdrawing the IFB or one which includes postponement of the date of receipt of Bids.

6. **SUBMISSION OF BID:**

A. Time: Bids not received by the time and date indicated on the Invitation for Bids will not be accepted, and will be returned unopened.

B. Hand Carried: Bids may be hand carried to the Purchasing Department on located at 1101 New York Ave., Room 118 Alamogordo, NM 88310

C. Mailed: Bids may be mailed to the attention of the Purchasing Department, 1101 New York Ave., Room 118, Alamogordo, New Mexico 88310. The County shall not be responsible for bids that are mailed and not received by the opening date and time specified in the solicitation.

D. **Envelope Preparation**: The envelope/package containing a bid must be sealed and the following identifying information legibly written or typed on the outside.

1). Name of Bidder
2). Bid Number assigned by the County
3). Opening date and time as identified on the bid

WITHDRAWAL OF BIDS:

A bid may be withdrawn in person at any time BEFORE the scheduled opening of bids, provided a receipt for the withdrawn bids is signed by the bidder or the bidder's authorized representative. The County reserves the right to request proof of authorization to withdraw a bid.

9. REJECTION/CANCELLATION OF BIDS:
Any solicitation, prior to opening or after opening, may be canceled or any or all bids may be rejected in whole or in part when it is in the best interest of the County.

10. MINOR OR TECHNICAL IRREGULARITIES:
Minor or technical irregularities in a bid, when there is no effect on price, quality or quantity may be waived and clerical errors in a bid may be corrected, if permitted by the Purchasing Officer and are in the best interest of the County.

11. NONCONFORMING/CONDITIONAL, OR COUNTER BIDS:
Any bid which is nonconforming or conditional, whether in part or in whole will be rejected.

13 AWARD OF CONTRACT:

A. When Award Occurs: The award of a contract occurs when a Purchase Order is issued or other evidence of acceptance by the County if provided to the bidder. A Recommendation of Award does not constitute award of contract.

B. Award: If a contract is awarded, it shall be awarded to the responsive and responsible bidder whose bid is lowest in total price and is the most advantageous to the County, specifications and other factors considered.

C. Basis of Award: The County reserves the right to award a contract based on this Bid in total or by group of items, on the basis of individual items, or any combination these, which in the judgment of the Purchasing Officer, best serves the interests of the County, unless otherwise stated in this Bid.

D. To qualify for the five percent (5%) in state Resident Preference, the bidder must provide their assigned Resident Certification Number with their bid (an appropriate place is designated in the Bid Form). If a bidder does not provide their assigned Resident Certification Number with their bid, the bid shall not be considered as made by a resident business or a resident manufacturer and no preference shall be applied during the analysis of that bid.

14 DELIVERY, ACCEPTANCE AND GUARANTEE:

A. **No Delivery before Purchase Order is Issued**: No bidder, including the bidder to whom an award is made shall deliver any item of tangible personal property, commence services or construction prior to the Issuance of a Purchase Order or Notice to Proceed issued by the County Purchasing Department.

B. Cancellation for Non-Delivery: The County reserves the right to cancel any order not delivered by a guaranteed date stipulated in this bid or any contract resulting from this invitation without liability on the County's part.

C. Acceptance of Delivery: Acceptance by the County of any delivery shall not relieve the Contractor of any guarantee or warranty, expressed or implied. Such acceptance of delivery shall not be considered an acceptance of services or

materials not in accordance with the specifications. Such acceptance of delivery shall not waive the County's right to require replacement of defective material or inadequate service.

B. Inferior Materials, Etc.: All items of tangible personal property, services or construction found inferior to the quality specified in this Bid, deficient or incorrect in weight, measurement, workmanship, handicraft or otherwise, may be rejected as a whole or in part and then shall be removed by the Contractor at the Contractor's own risk and expense promptly after notice of rejection. The Contractor shall assume responsibility for taking the necessary action to correct or replace the rejected items, within the time frame specified in the notice of rejection.

15. INVOICE AND PAYMENTS:

The Contractor shall submit an accurate invoice, in duplicate, for each purchase. Invoices shall refer to the Purchase Order Number, the Release Form Number if applicable, and shall be itemized unless otherwise specified in this Bid. Invoices are to be mailed to: Otero County, Accounts Payable, 1101 New York Ave., Alamogordo, New Mexico, 88310. Invoices mailed or provided to any other entity will result in a delay in making payment. Offerors are encouraged to inquire if payments due are not received within thirty (30) days after delivery of goods/services and submittal of invoice by contacting the Accounts Payable at (575) 437-7427

16. EQUAL OPPORTUNITY COMPLIANCE/WORKERS' COMPENSATION: Otero County does not discriminate on the basis of race, color, national origin, sex, religion, age, or disability in the employment or the provisions of services. The "Contractor" agrees to comply strictly with the policies of "County", as well as all Federal and State Laws pertaining to Equal Employment Opportunity, including the Americans with Disabilities Act, and will not discriminate against any person or deny any person participation or benefit from the performance of this Agreement as a result of any discriminatory action. The "Contractor" agrees to comply with State Laws and rules applicable to workers' compensation benefits for its employees. If the "Contractor" fails to comply with the Workers' Compensation Act and applicable rules when required to do so, the "County" may terminate this agreement.

17. SUSPENDED CONTRACTORS

A business (contractor, subcontractor or supplier) that has either been debarred or suspended pursuant to the requirements of Sections 13-1-177 through 13-1-180, and Sections 13-4-11 through 13-4-17 NMSA as amended or through the federal Excluded Parties List System (EPLS) in accordance with executive Order's 1259 and 12689. The EO's for Suspended and Debarred are 12549 & 12689

18 **MINIMUM WAGE RATES**

The Current Minimum Wage Rate schedule may apply to this job and must be supplied (if applicable according to NMSA, 1978 13-1-D4-11.

19 DEFAULT/TERMINATION FOR CAUSE:

If, through any cause, the Contractor fails to fulfill the Contractor's obligations under any contract resulting from this Bid in a timely and proper manner, or if the Contractor violates any of the covenants, agreements or stipulations of such contract, the County shall notify the Contractor of such violations in writing and allow the Contractor a reasonable time, set out in the notice, to correct the default. If the default is not corrected within the specified time period the County shall have the right to cancel the contract and any or all other current contracts with the Contractor, and, if applicable, to purchase the required goods or services from another source or sources. The County shall provide written notice to the Contractor specifying the effective date of cancellation. The notice of cancellation may be contained in the notice of default. If a contract resulting from this Bid is canceled, the Contractor shall not be relieved of liability to the County for damages caused by its breach of the contract. The County reserves the right to recover such damages, including but not limited to any excess cost incurred in having to purchase contract goods/services from other sources by a deduction from an unpaid balance due to the Contractor, collection against a performance or labor and materials payment bond, a combination of these remedies, or any other legal method available. In addition, the Contractor may be removed from the Purchasing Office Vendor List or determined to be ineligible to respond to future solicitations, as being not responsible.

20. TERMINATION FOR THE CONVENIENCE OF THE COUNTY:

The County may terminate any contract resulting from this Bid at any time by giving at least thirty (30) days' notice in writing of such termination to the Contractor. In such event, the Contractor shall be paid under the terms of the contract for all goods/services provided to and accepted by the County, if ordered or accepted by the County prior to the effective date of termination.

21. TERMINATION FOR LACK OF APPROPRIATIONS:

Funding for the contract resulting from this Bid has been appropriated by the County Commission for the County's current fiscal year. Notwithstanding any other provisions in the contract resulting from this Bid, its continuation beyond the end of the any fiscal year is contingent on the County Commission making the appropriations necessary to fund the contract. If sufficient appropriations are not made the contract may be terminated at the end of the County's then current fiscal year upon written notice given by the County to the Contractor. Such termination shall not constitute a default. All payment obligations of the County and all of its interest in the contract will cease upon the date of termination. The County's decision as to whether sufficient appropriations are available shall be accepted by the Contractor and shall be final.

21. RESIDENT BUSINESS PREFERENCE

Bids submitted by resident businesses shall be deemed five percent (5%) lower than the bid actually submitted. To receive a resident business preference a business must submit with its bid, a copy of a valid resident business certification issued by the New Mexico Taxation and Revenue Department. This will not apply when the expenditure includes Federal Funds 13-1-21.

22 RESIDENT VETERANS PREFERENCE

In accordance with Sections 13-1-21 and 13-1-22 NMSA 1978 resident veterans businesses are to receive the following preferences:

a. Resident veterans businesses with annual revenues of $1 million or less will be deemed ten percent(10%) lower than the bid actually submitted
b. Resident veterans businesses with annual revenue of more than $1 Million but less than $5 Million will be deemed eight percent (8%) lower than the bid actually submitted.
c. Resident veterans businesses with annual revenues of more than $5 Million will be deemed seven percent(7%) lower than the bid actually submitted

This preference is separate from the current instate preference and is not cumulative with that preference. If a vendor will be utilizing the preference, they must include a copy in their proposal of the Resident Veteran business certificate issued by the State of New Mexico Taxation and Revenue Department. This preference will not apply when the expenditure includes federal funds for a specific purchase.

CAMPAIGN CONTRIBUTION FORM

In accordance with Appendix C, Offerors must comply with 13-1-191.1 pertaining to the disclosure of campaign contributions to an applicable public official of a local public body. **Offeror(s) shall submit the "Campaign Contribution Disclosure Form" with their proposal submittal. Any Offeror who fails to comply with this requirement will be disqualified, no exceptions.**

23 BRIBERY AND KICKBACK

The procurement code of New Mexico (section 13-1-28 thru 13-1-199, NMSA 1978) impose a third degree felony penalty for bribery of public official or public employee. In addition, the New Mexico Criminal Statutes (section30-4-1, NMSA 1978); it is a fourth degree felony to commit the offense of soliciting or receiving illegal kickbacks. Also Section 30-41-3, NMSA, 1978 states that it is a fourth degree felony to commit the offense of offering or paying illegal kickbacks.

24 GUARANTEED PERFORMANCE:

The bidder, if awarded a contract as a result of this bid, guarantees that the materials supplied are capable of the performance required in the specifications in this bid, and agrees to make such changes, adjustments or replacements as are immediately necessary in order for the materials to meet the purchasing requirements at no cost to the county. If defects or specification failures are discovered, the purchasing officer shall have the right, notwithstanding acceptance and payment to require the unit/item to be properly furnished in accordance with the specifications and drawings at the cost and expense of the bidder or the bidder's surety.

25. BID SECURITY;

A Bid must be accompanied by Bid security made payable to Otero County in an amount of 5 percent of Bidders maximum Bid price and in the form of a certified check, bank money order, or a Bid bond (on the form attached) issued by a surety meeting the requirements of the General Conditions. The Bid security of the Successful Bidder will be retained until such Bidder has executed the Contract Documents, furnished the required contract security and met the other requirements

Successful Bidder fails to execute and deliver the Contract Documents and furnish the required contract security within 15 days after Notice of Award, Otero County may consider Bidder to be in default, annul the Notice of Award, and the Bid security of the Bidder will be forfeited. Such forfeiture shall be Owner's exclusive remedy if Bidder defaults. The Bid Security of other Bidders whom Otero County believe4s to have a reasonable chance of receiving the award may be retained by Otero County until the earlier of seven days after the Effective Date of the Agreement or 61 days after the Bid opening whereupon Bid furnished by such Bidders will be returned.

Bid security of other Bidders whom Owner believes do not have a reasonable chance of receiving the award will be returned within seven days after the Bid opening.

26. **CONTRACT TIMES**

The number of days within which, or the dates of which, [Milestones are to be achieved and] the Work to be substantially completed and ready for final payment are set forth in the agreement

27 **LIQUIDATED DAMAGES**

Provisions for liquidated damages, if any are set forth in the Agreement.

28. **SUBCONTRACTORS, SUPPLIERS, AND OTHERS**

The bidder shall list the Subcontractors or material suppliers he proposes to use for all trades or items on the Subcontractor Listing form. If awarded the contract, the Bidder shall use the firm listed, or himself if "General Contractor" has been listed; unless a request for a change or substitution is approved by the ENGINEER, and the OWNER for any reason as outlined herein.

The ENGINEER or OWNER shall consider any request for a change in the listed firms, if the beneficial to both the OWNER and the Bidder by not using the listed firm. Satisfactory reasons for a substitution may include the inability to bond or lack of evidence of being able to furnish acceptable materials on schedule. Also, if the Bidder has made a legitimate error in listing a low Subcontractor,
a request for substitution, made after the Bid opening with the ENGINEER's and OWNER's approval, will be considered. The proof of error must be conclusive, based upon the approval of said evidence by the listed Subcontractor or material supplier and/or any other confirmation satisfactory to the ENGINEER or OWNER.

The Bidder shall not list himself as the supplier or as the Subcontractor for any trade unless he has previously performed work of this type or can prove to the ENGINEER's and OWNER's satisfaction that he actually has, or will obtain, fully adequate facilities and plans to perform the work with his own forces. Contractor must be licensed to perform such work.
Omission or non-compliance with the intent of the Subcontractor Listing form will be ground For considering a Bid as **non-responsive.**

Prior to the award of the Contract, the ENGINEER will notify the Bidder in writing if either the OWNER or the ENGINEER, after due investigation and written findings of fact, has reasonable and substantial objection to any person or organization on such list. If the OWNER or ENGINEER has reasonable and substantial objection to any person or organization on such list and refuses in writing to accept such person or organization, the Bidder may, at his option, (1) withdraw his Bid, or (2) submit an acceptable substitute Subcontractor with no increase in his Bid Price. In the event of withdrawal under this paragraph, Bid Security **will not** be forfeited.

The Successful Bidder shall, within 7 calendar days of notice of the award of a Contract for the Work, submit the following information to the ENGINEER or OWNER: (A) A signed list of the proprietary names and the suppliers of principal items or systems of materials and equipment proposed for the Work; and (B) A list signed by all Subcontractors proposed for the principal portions of the Work in accordance with the Subcontractors Listing form submitted with the Bid.

The Successful Bidder will be required to establish to the satisfaction of the ENGINEER and the OWNER the reliability and responsibility of the persons or entities proposed to furnish and perform the Work described in the Bidding Documents.

Persons and organizations proposed by the Bidder and to whom the OWNER and the ENGINEER have made no reasonable objection under the provisions of paragraph 12.07 must be used on the Work for which they were proposed and shall not be changed except with the written consent of the ENGINEER and the OWNER.

No Successful Bidder shall be required to employ any Subcontractor, other person, or organization against whom he has reasonable objection.

The Bidder is specifically advised that any person or other party to whom it is proposed to award a subcontract under this Bid must be acceptable to the OWNER after verification by the Funding Agency of the current eligibility .status. Approval of the proposed subcontract award **cannot** be given by the OWNER unless and until the proposed subcontractor has submitted the Certifications and/or evidence showing that it has fully complied with any reporting requirements to which it is or was subject.

Although the Bidder is **not** required to attach such Certifications by proposed subcontractors to the Bid, the Bidder is advised of these requirements so that appropriate action can be taken to prevent subsequent delay in subcontract awards.

BID Form

SEALED BIDS will be opened in the County of Otero Purchasing Agent's Office at 1101 New York Avenue, Room 118, Alamogordo, NM 88310. **The proposal Name, Number, Opening Date and Time *must* appear on the outside of the sealed envelope.** Sealed envelope must be received at the Purchasing Agent's Office by the time and date as indicated above.

The undersigned certifies that he/she has read and understands the PROPOSAL TERMS AND CONDITIONS, and that the firm represented accepts these terms and conditions and submits the attached proposal in full compliance thereof.

COMPANY NAME: _____

ADDRESS: _____

CITY/STATE/ZIP CODE: _____

NEW MEXICO CRS #: _____

DO YOU QUALIFY FOR 5% IN-STATE PREFERENCE: ☐ YES ☐ NO Cert. #_____

AUTHORIZED SIGNATURE: _____ TITLE:_____

TYPE/PRINT NAME:_____ DATE:_____

PHONE NUMBER:_____ FAX NUMBER:_____

EMAIL ADDRESS:_____

PROPOSAL TOTAL: $_____

Proposal will remain firm until 60 (sixty) days after the proposal opening date or longer if specified by vendor.

OPTIONS OFFERED BY PROPOSER: *Identify any recommended services, layout recommendations and/or equipment being offered for consideration by the Proposer. Describe item with any costs associate with the option offered. The PROPOSER may attached additional pages if necessary.*

_____

_____

_____

Certification Regarding
Debarment, Suspension, and Other Responsibility Matters

–

Offeror certifies to the best of its knowledge and belief that it and its principals:

1. Are not presently debarred, suspended, proposed for debarment, declared ineligible, or voluntarily excluded from covered transactions by any Federal department or agency;

2. Have not within a three year period preceding this proposal been convicted of, had a civil judgment rendered against them for commission of fraud or a criminal offense in connection with obtaining, attempting to obtain, or performing a public (Federal, State, or Local) transaction or contract under a public transaction; violation of Federal or State Antitrust statutes or commission of embezzlement, theft, forgery, bribery, falsification or destruction of records, making false statements, or receiving stolen property;

3. Are not presently indicted for or otherwise criminally or civilly charged by a government entity (Federal, State, or local) with commission of any offenses; and

4. Have not within a tree-year period preceding this application/proposal had one or more public transaction (Federal, State, or Local) terminated for cause or default.

I understand that a false statement on this certification may be grounds for rejection of this proposal or termination of the award. Under 18USC Sec. 1001, a false statement may result in a fine of up to $10,000 or imprisonment of up to 5 years, or both

_____ _____

Print Name & Title of Authorized Representative Signature of Authorized Representative Date

OTERO COUNTY PURCHASING
TERMS & CONDITIONS
UNLESS OTHERWISE SPECIFIED.

1. **BIDS ARE TO COMPLY WITH ALL INSTRUCTIONS AND PROVIDE THE INFORMATION REQUESTED. FAILURE TO DO SO MAY DISQUALIFY YOUR BID.** All bid items are to be NEW and of most current production, unless otherwise specified.
2. Samples of items, when required, must be furnished free of expense prior to the opening of bids and if not destroyed, will, upon request, be returned at the bidders expense.
3. Prices should be stated in units or quantity specified, with packing included. All deliveries will be F.O.B. Alamogordo, NM unless otherwise specified.
4. Time or proposed delivery must be stated in definite terms. If time varies for different items, the bidder should so state.
5. Time of delivery shall be stated as the number of calendar days following receipt of the order either verbally or in writing, whichever is received first by the vendor, to receipt of the goods or services by Otero County.
6. Time of delivery may be a consideration in the award.
7. **Envelopes containing bids must be sealed and marked with name, address of the bidder, due date, and bid number.**
8. **IMPORTANT:** Bids not received in the office of the Purchasing Agent at the time of opening are disqualified and will be returned unopened.
9. Corrections and/or modifications received after the opening time specified will not be accepted.
10. Where an item is specified by brand name and numbers these are used in these specifications as a matter of convenience to indicate quality, type, and features desired. Accordingly demonstrably equal merchandise will be given full consideration and the bidder is invited to offer such, except where it is clearly stated that such brand names and/or models are specified for the purpose of standardization. Any "or equal" items offered must be substantially equal to the appearance, design, dimensions, approximate cost of the item specified, and must be of equivalent materials, function, and sturdiness of construction of the item specified. Any deviation from specifications must be clearly itemized by the bidder.

    When offering substitutions, please specify, and include descriptive literature.
11. When brand, number, or level of quality is not stated by the bidder, it is understood the offer is exactly as specified.
12. Otero County is exempt from paying sales tax for materials and federal excise taxes. Do not include those taxes in bid. A nontaxable transaction certificate will be provide when payment is made. Services and tax on labor only are not exempt.
13. If your bid is accepted, you will receive notification either verbally or in writing by an issuance of a Purchase Order Number authorizing you to make delivery. Only the accepted bidder will be notified of awards.
14. **ATTENTION BOOKKEEPING & AUDITING DEPARTMENTS:** Complete payment will be made only when entire order is filled, with the exception of "Open Order Purchases", unless otherwise stated on purchase order. **EXCEPTION: Partial payments will be allowed upon written notification and approval if order cannot be completed in a single shipment.** Payment terms are Net 30 days unless otherwise stated.
15. All addenda so issued shall become part of the bid documents.
16. Pricing shall remain effective for a minimum of thirty

    (30) days after bid opening date.

CONDITIONS

1. The Purchasing Agent reserves the right to reject any and all bids, to waive any informality in bids, and **unless** otherwise specified to the bidder, to accept any item on the bid.
2. In case of error in the extension of prices in the bid, the unit price will govern.
3. Prompt payment discounts will not be considered in computing the low bid. Otero County will take advantage of cash discounts offered wherever possible.
4. Time in connection with discount offered will be computed from date of delivery or from date correct invoice is received, whichever is later.
5. Final inspection and acceptance will be made at the destination. Supplies rejected at the destination for non-conformance with specifications shall be removed at the vendor's risk and expense, promptly after notice of rejection.
6. Otero County requires vendor certification be the New Mexico State Purchasing Agent before the 5% in-state bidding preference can be extended. Bidders claiming this preference must show certification number on bid and must be prepared to show evidence of certification for the commodity being bid. In-state vendors: failure to secure above will result in non-considerations of any preference for in-state bidders. This will not apply when Federal funds are used, Chapter 13-1-21.
7. Otero County reserves the right to award by item, group of items, or total bids; to reject any and all bids in whole or in part if, in the judgment of the Purchasing Agent, the best interests of Otero County will be served.
8. The Otero County Purchase Order Number shall be shown on all packing, delivery tickets, and other correspondence in connection with the shipment. The user's count will be accepted by the Vendor as final and conclusive on all shipments not accompanied by a packing ticket.

   The Vendor's invoice shall be submitted and contain the following information: order number, description of supplies or services, quantities, unit prices, and extended totals. Separate invoices shall be rendered for each and every complete shipment.

9. Otero County reserves the right to cancel all or any part of this order without cost to the County, if the Vendor fails to meet the provisions of this order and, except as otherwise provided herein, to hold the Vendor liable for any excess cost occasioned by the County due to the Vendor's default. The Vendor shall not be liable for any excess costs if failure to perform the order arises out of cause beyond the control and without the fault or negligence of the Vendor, such causes include, but are not restricted to, acts of God or of the public enemy, acts of the State or of the Federal Government, fires, goods, epidemics, quarantine restrictions, strikes, freight embargo's, unusually severe weather, and defaults of subcontractors due to any of the above, unless Otero County shall determine that the supplies or services to be furnished by the subcontractor were obtainable from other sources in sufficient time to permit the Vendor to meet the required delivery scheduled. The rights and remedies of the county provided in this paragraph shall not be exclusive and are in addition to any other rights now being provided by law or under this order.
10. In signing this bid or accepting Purchase Order, the Vendor certifies he/she has not, either directly or indirectly, entered into action in restraint of free competitive bidding in connection with this proposal submitted to Otero County Purchasing Agent.
11. Sections 13-1-28 through 13-1-199 NMSA 1978, imposes civil and criminal penalties for its violation. The New Mexico criminal statutes impose felony penalties for bribes, gratuities, and kickbacks.
12. **THIS BID/AWARD IS CONTINGENT UPON AVAILABLE FUNDING.**

(terms)

rev 05/96

CAMPAIGN CONTRIBUTION DISCLOSURE FORM

Pursuant to the Procurement Code, Sections 13-1-28, et seq., NMSA 1978 and NMSA 1978, § 13-1-191.1 (2006), as amended by Laws of 2007, Chapter 234, any prospective contractor seeking to enter into a contract with any state agency or local public body **for professional services, a design and build project delivery system, or the design and installation of measures the primary purpose of which is to conserve natural resources** must file this form with that state agency or local public body. This form must be filed even if the contract qualifies as a small purchase or a sole source contract. The prospective contractor must disclose whether they, a family member or a representative of the prospective contractor has made a campaign contribution to an applicable public official of the state or a local public body during the two years prior to the date on which the contractor submits a proposal or, in the case of a sole source or small purchase contract, the two years prior to the date the contractor signs the contract, if the aggregate total of contributions given by the prospective contractor, a family member or a representative of the prospective contractor to the public official exceeds two hundred and fifty dollars ($250) over the two year period.

Furthermore, the state agency or local public body may cancel a solicitation or proposed award for a proposed contract pursuant to Section 13-1-181 NMSA 1978 or a contract that is executed may be ratified or terminated pursuant to Section 13-1-182 NMSA 1978 of the Procurement Code if: 1) a prospective contractor, a family member of the prospective contractor, or a representative of the prospective contractor gives a campaign contribution or other thing of value to an applicable public official or the applicable public official's employees during the pendency of the procurement process or 2) a prospective contractor fails to submit a fully completed disclosure statement pursuant to the law.

The state agency or local public body that procures the services or items of tangible personal property shall indicate on the form the name or names of every applicable public official, if any, for which disclosure is required by a prospective contractor.

THIS FORM MUST BE INCLUDED IN THE REQUEST FOR PROPOSALS AND MUST BE FILED BY ANY PROSPECTIVE CONTRACTOR WHETHER OR NOT THEY, THEIR FAMILY MEMBER, OR THEIR REPRESENTATIVE HAS MADE ANY CONTRIBUTIONS SUBJECT TO DISCLOSURE.

The following definitions apply:

"**Applicable public official**" means a person elected to an office or a person appointed to complete a term of an elected office, who has the authority to award or influence the award of the contract for which the prospective contractor is submitting a competitive sealed proposal or who has the authority to negotiate a sole source or small purchase contract that may be awarded without submission of a sealed competitive proposal.

"**Campaign Contribution**" means a gift, subscription, loan, advance or deposit of money or other thing of value, including the estimated value of an in-kind contribution, that is made to or received by an applicable public official or any person authorized to raise, collect or expend contributions on that official's behalf for the purpose of electing the official to statewide or local office. "Campaign Contribution" includes the payment of a debt incurred in an election campaign, but does not include the value of services provided without compensation or unreimbursed travel or other personal expenses of individuals who volunteer a portion or all of their time on behalf of a candidate or political committee, nor does it include the administrative or solicitation expenses of a political committee that are paid by an organization that sponsors the committee.

"**Family member**" means spouse, father, mother, child, father-in-law, mother-in-law, daughter-in-law or son-in-law of (a) a prospective contractor, if the prospective contractor is a natural person; or (b) an owner of a prospective contractor.

"**Pendency of the procurement proces**s" means the time period commencing with the

public notice of the request for proposals and ending with the award of the contract or the cancellation of the request for proposals.

"**Prospective contractor**" means a person or business that is subject to the competitive sealed proposal process set forth in the Procurement Code or is not required to submit a competitive sealed proposal because that person or business qualifies for a sole source or a small purchase contract.

"**Representative of a prospective contractor**" means an officer or director of a corporation, a member or manager of a limited liability corporation, a partner of a partnership or a trustee of a trust of the prospective contractor.

Name(s) of Applicable Public Official(s) if any:_____
(Completed by State Agency or Local Public Body)

DISCLOSURE OF CONTRIBUTIONS BY PROSPECTIVE CONTRACTOR:

Contribution Made By: _____

Relation to Prospective Contractor: _____

Date Contribution(s) Made: _____
_____

Amount(s) of Contribution(s) _____
_____

Nature of Contribution(s) _____
_____

Purpose of Contribution(s) _____
_____

(Attach extra pages if necessary)

_____ _____
Signature Date

_____
Title (position)

--OR—

NO CONTRIBUTIONS IN THE AGGREGATE TOTAL OVER TWO HUNDRED FIFTY DOLLARS ($250) WERE MADE to an applicable public official by me, a family member or representative.

_____ _____
Signature Date

_____
Title (Position)

PROPOSAL CHECKLIST

Did You:

☐ Include One (1) original and (3) three copies of the proposal

☐ Sign and notarize the "Non-Collusion Affidavit" form.

☐ Sign the "Related party disclosure form.

☐ Fill Out and sign the Resident Veterans Preference form

☐ Fill Out and Sign the Campaign Contribution Form

☐ Acknowledge all addenda

☐ Review all clarifications/questions/answers

☐ Deliver your sealed proposal to Otero County Purchasing Department, 1101 New York Ave, Room 118, Alamogordo, New Mexico 88310 before October 22, 2015 at 3:00 pm (local time).

☐ Clearly mark your proposal with RFP **16-008 BAY DOORS** on the front of the envelope.

∗ **If not completed as required, your proposal may be deem non-responsive.** Contact the Purchasing Department immediately if any portion is missing. This form is for your information only and does not need to be submitted with your proposal