A SURVEY PLAT OF A 10 FOOT AND 20 FOOT UTILITY EASEMENT IN THE SW 1/4 SW 1/4 NE 1/4 OF SECTION 22, T15S, R10E, NMPM, OTERO COUNTY, NEW MEXICO

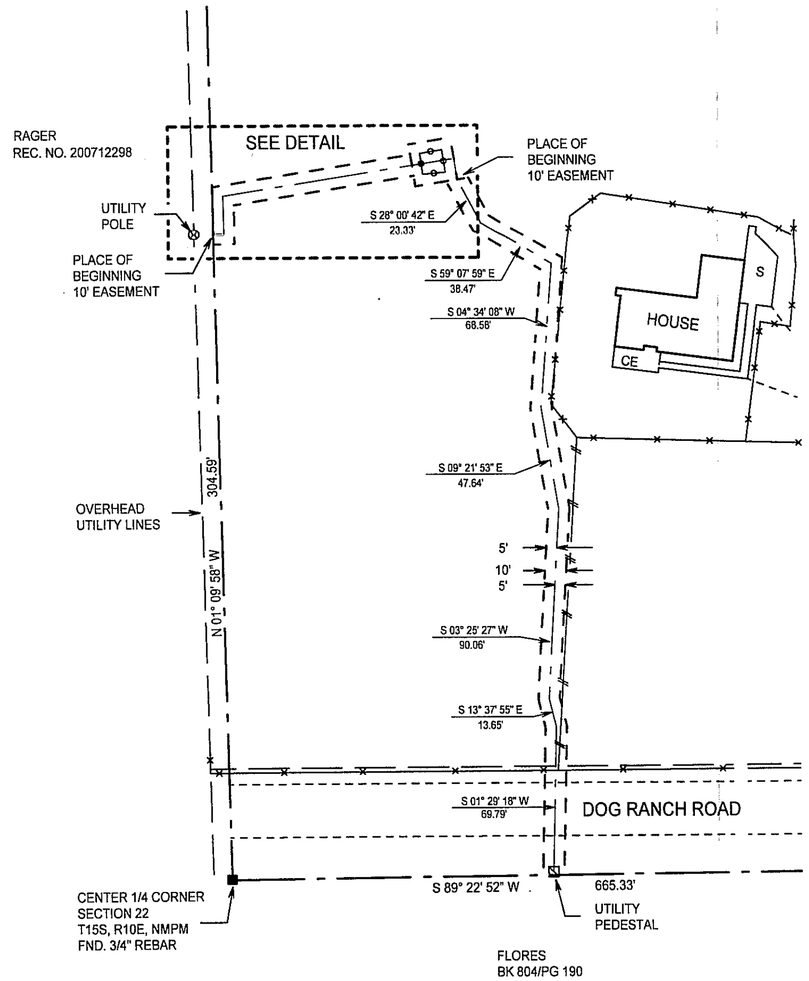

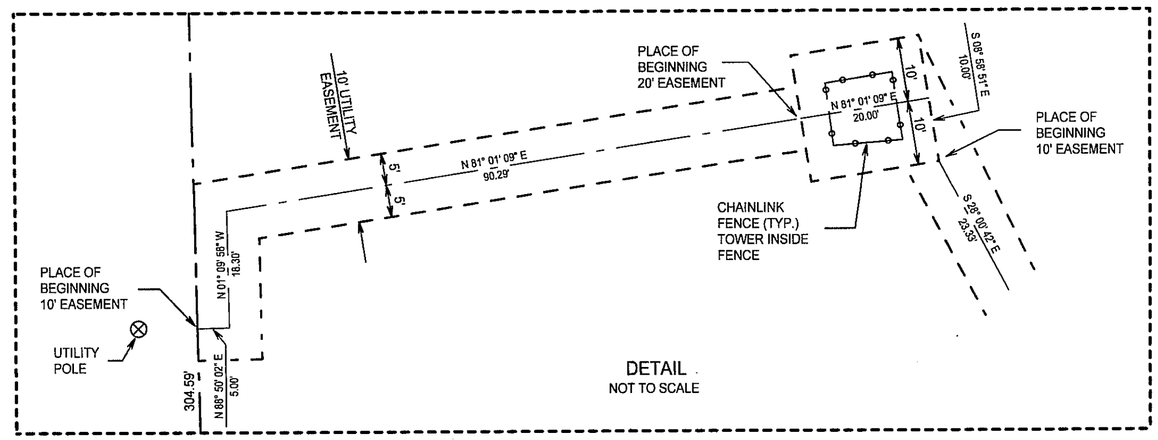

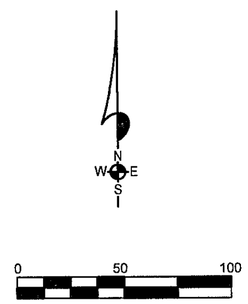

A UTILITY EASEMENT IN THE SW1/4 SW1/4 NE1/4 SECTION 22, T15S, R10E, NMPM LYING EITHER 5-FEET OR 10-FEET ON EACH SIDE OF THE FOLLOWING DESCRIBED CENTERLINE AS CALLED OUT:

STARTING AT THE CENTER ONE-QUARTER CORNER OF SAID SECTION 22, AND GOING N01°09'58"W ALONG THE NORTH/SOUTH CENTERLINE OF SAID SECTION 22 A DISTANCE OF 304.59 FEET TO THE PLACE OF BEGINNING OF SAID 10-FOOT EASEMENT; THENCE N88°50'02"E ALONG SAID CENTERLINE A DISTANCE OF 5.00 FEET; THENCE N01°09'58"W ALONG SAID 10-FOOT EASEMENT A DISTANCE OF 18.30 FEET; THENCE N81°01'09"E ALONG SAID 10-FOOT EASEMENT A DISTANCE OF 90.29 FEET TO THE PLACE OF BEGINNING OF SAID 20-FOOT EASEMENT; THENCE CONTINUING N81°01'09"E ALONG SAID 20-FOOT EASEMENT A DISTANCE OF 20.00 FEET; THENCE S08°58'51"E A DISTANCE OF 10.00 FEET TO THE PLACE OF BEGINNING OF SAID 10-FOOT EASEMENT; THENCE S28°00'42"E ALONG SAID 10-FOOT EASEMENT A DISTANCE OF 23.33 FEET; THENCE S59°07'59"E ALONG SAID 10-FOOT EASEMENT A DISTANCE OF 38.47 FEET; THENCE S04°34'08"W ALONG SAID 10-FOOT EASEMENT A DISTANCE OF 68.58 FEET; THENCE S09°21'53"E ALONG SAID 10-FOOT EASEMENT A DISTANCE OF 47.64 FEET; THENCE S03°25'27"W ALONG SAID 10-FOOT EASEMENT A DISTANCE OF 90.06 FEET; THENCE S13°37'55"E ALONG SAID 10-FOOT EASEMENT A DISTANCE OF 13.65 FEET; THENCE S01°29'18"W ALONG SAID 10-FOOT EASEMENT A DISTANCE OF 69.79 FEET TO AN EXISTING TELEPHONE PEDESTAL AND THE END OF SAID CENTERLINE.

SUBJECT TO ANY RIGHTS-OF-WAY OR OTHER EASEMENTS AS GRANTED OR RESERVED BY INSTRUMENTS OF RECORD OR AS NOW EXISTING ON SAID TRACT.

CERTIFICATE

I, KLAD ZIMMERLE, A NEW MEXICO REGISTERED PROFESSIONAL SURVEYOR, CERTIFY THAT I CONDUCTED AND AM RESPONSIBLE FOR THIS IMPROVEMENT PLAT, THAT THIS IMPROVEMENT PLAT IS TRUE AND CORRECT TO THE BEST OF MY KNOWLEDGE AND BELIEF, AND THAT THIS IMPROVEMENT PLAT MEETS THE MINIMUM STANDARDS FOR SURVEYING IN NEW MEXICO.

KLAD ZIMMERLE NEW MEXICO 8334 LICENSED PROFESSIONAL SURVEYOR

NOTE:
IF THE SEAL IS NOT RED OR EMBOSSED AND THE SIGNATURE BLACK, THEN THIS IS AN UNAUTHORIZED COPY AND THE CERTIFICATIONS ARE NULL AND VOID.

INDEXING INFORMATION FOR COUNTY CLERK

OWNER(S):

SECTION(S): 22 TOWNSHIP(S): 15 S RANGE(S) 10 E

SUBDIVISION:

FILING AND RECORDING

FILED FOR RECORD IN THE OTERO COUNTY CLERK'S OFFICE ON THE 14th

DAY OF June, 2011, AT 9:56 A.M. P.M. BOOK 71 PAGE 93

RECEPTION # 201105031

REC DATE:6/14/11 REC TIME:9:56:56 AM INSTR#:201105031 CLK
OTERO COUNTY,ROBYN HOLMES COUNTY CLERK PAGE 1 OF 1

NOTE:
BOOK AND PAGE NUMBERS REFERRED TO ARE OF THE RECORDS OF OTERO COUNTY, NEW MEXICO, OBTAINED FROM THE FILES OF THE OTERO COUNTY ASSESSOR'S OFFICE.

TULAROSA BASIN TELEPHONE COMPANY

ALAMOTERO LAND SURVEYS, P.C.

PROFESSIONAL LAND SURVEYORS
1101 NORTH FLORIDA AVENUE
ALAMOGORDO, NEW MEXICO
PHONE 575-437-7074 FAX 575-437-7075

COPYRIGHT © 2011 ALAMOTERO LAND SURVEYS, P.C.

DATE: 06/08/11
DRAWN BY: LTR
CHECKED BY: KZ

SCALE: 1" = 50'
JOB NO.: 11-0317
SHEET 2 OF 2

LTR/PLAT-11