SUMMARY SUBDIVISION PLAT OF
LESLIE SHAW SUBDIVISON

(PART OF THE NW 1/4 OF THE NE 1/4 AND PART OF THE
NE 1/4 OF THE NE 1/4 OF SECTION 30, TOWNSHIP 16 SOUTH, RANGE 10 EAST, N.M.P.M.)

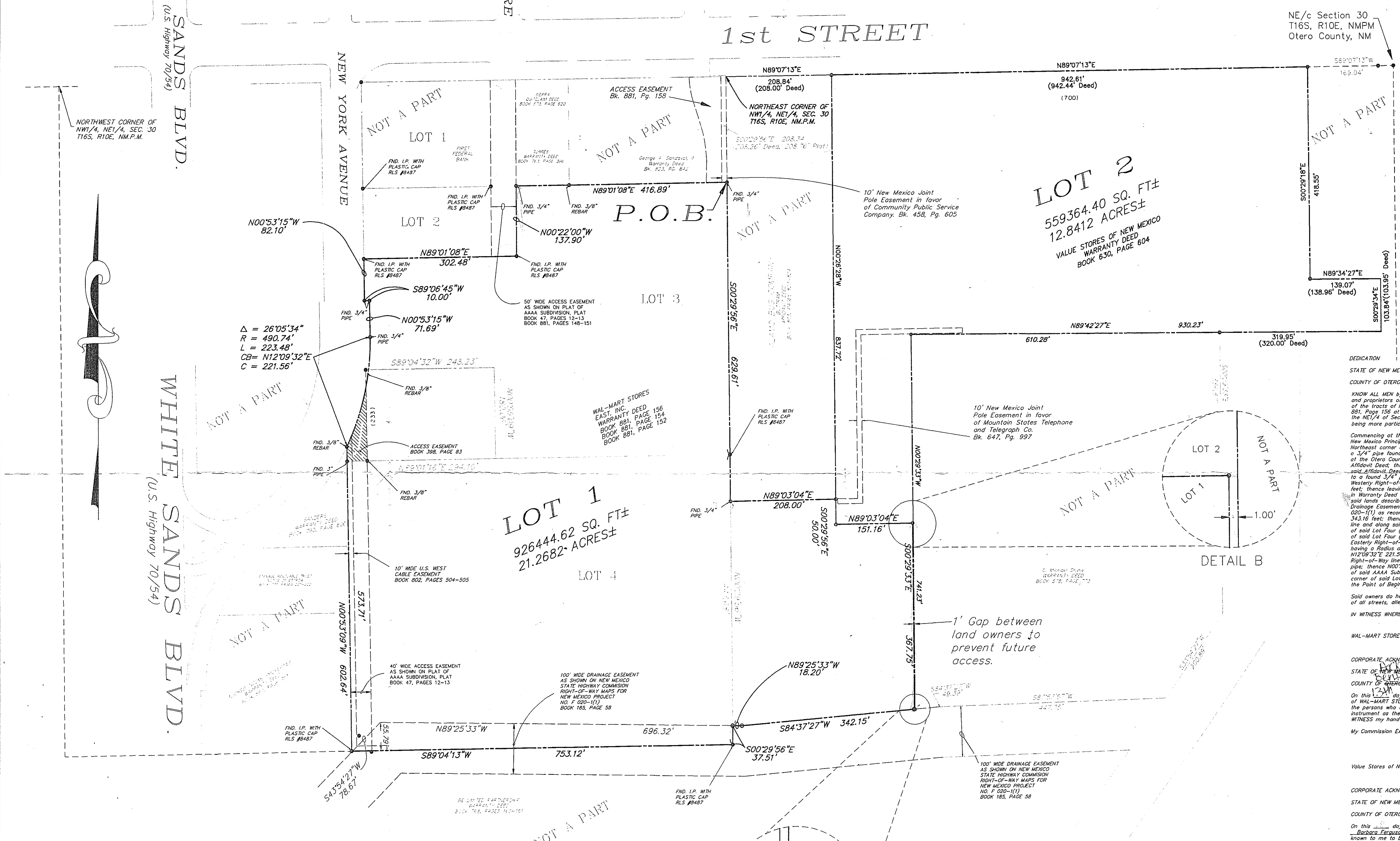

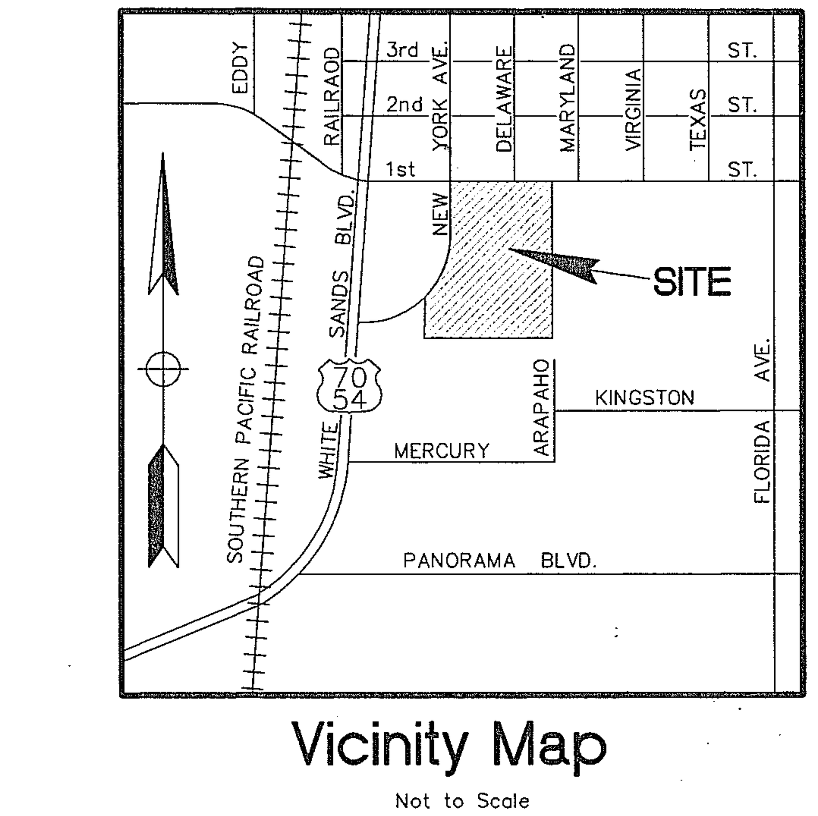

Vicinity Map

Not to Scale

GRAPHIC SCALE

100 0 50 100

(IN FEET)
1 inch = 100 ft.

DEDICATION)

STATE OF NEW MEXICO)

COUNTY OF OTERO)

KNOW ALL MEN by these presents that Wal-Mart Stores East, Inc. and Valu + Stores of New Mexico, Inc., are the owners and proprietors of all of Lots Three (3) and Four (4), AAAA Subdivision, as shown in Plat Book 47 at Pages 12–13 and all of the tracts of land described in a Warranty Deed recorded in Book 630, Page 604 and a Warranty Deed recorded in Book 881, Page 156 at the Otero County Court House and also being part of the NW1/4 of the NE1/4 and part of the NE1/4 of the NE1/4 of Section 30, Township 16 South, Range 10 East, N.M.P.M., City of Alamogordo, Otero County, New Mexico and being more particularly described by metes and bounds as follows:

Commencing at the Northeast corner of the NW1/4 of the NE1/4 of Section 30, Township 16 South, Range 10 East of the New Mexico Principal Meridian; Thence S00°29'56"E 208.34 feet to a 3/4 inch pipe found at the Point of Beginning at the Northeast corner of said Lot Three (3); thence along the East line of said AAAA Subdivision S00°29'56"E 629.61 feet to a 3/4" pipe found at the Southwest Corner of lands described in an Affidavit Deed recorded in Book 458, Pages 823–824 at the Otero County Court House; thence N89°03'04"E 208.00 feet to the Southeast Corner of lands described in said Affidavit Deed; thence N00°26'28"W 837.71 feet to a 3/4" pipe found at the Northeast Corner of lands described in said Affidavit Deed; thence along the North line of the NE1/4 of the NE1/4 of said Section 30 N89°07'13"E 942.61 feet to a found 3/4" pipe; thence leaving said North line S00°29'18"E 418.55 feet; thence N89°34'27"E 139.07 feet to the Westerly Right-of-Way line of South Florida Avenue; thence along said Westerly Right-of-Way line S00°29'34"E 103.84 feet; thence leaving said Westerly Right-of-Way line S89°42'27"W 930.23 feet to the Northwest corner of lands described in Warranty Deed Book 578 at Page 773; thence S00°29'33"E 741.23 feet to an iron pin found at the Southwest corner of said lands described in Warranty Deed Book 578 at Page 773, said point also being on the Northerly line of a 100 foot wide Drainage Easement as shown on New Mexico State Highway Commission Right-of-Way Maps for New Mexico Project No. F 020–1(1) as recorded in Book 185, Page 58 at the Otero County Court House; thence along said Northerly line S84°37'27"W 343.16 feet; thence N89°25'33"W 18.20 feet to the East line of Lot 4 of said AAAA Subdivision; thence leaving said Northerly line and along said East line S00°29'56"E 37.51 feet to a found rebar with Plastic Cap (RLS 8487) at the Southeast Corner of said Lot Four (4); thence S89°04'13"W 753.12 feet to a found rebar with Plastic Cap (RLS 8487) at the Southwest Corner of said Lot Four (4); thence along the West line of said AAAA Subdivision N00°53'09"W 602.64 feet to a point on the Easterly Right-of-Way line of New York Avenue thence along said Easterly Right-of-Way line and along a curve to the left having a Radius of 490.74 feet (490.77 feet, Plat), a Deflection Angle of 26°05'34", a Chord Bearing and Distance of N12°09'32"E 221.56 feet for an Arc Distance of 223.48 feet to a found 3/4 inch pipe; thence continuing along said Easterly Right-of-Way line N00°53'15"W 71.69 feet to a found 3/4 inch pipe; thence S89°06'45"W 10.00 feet to a found 3/4 inch pipe; thence N00°53'15"W 82.10 feet to a found rebar with Plastic Cap (RLS 8487) at the Southwest corner of Lot Two (2) of said AAAA Subdivision; thence N89°01'08"E 302.48 feet to a found rebar with Plastic Cap (RLS 8487) at the Southeast corner of said Lot Two (2); thence N00°22'00"W 137.90 feet to a found 3/4 inch pipe; thence N89°01'08"E 416.89 feet to the Point of Beginning and containing 34.1095 acres or 1,485,809.03 square feet, more or less.

Said owners do hereby cause said tract to be subdivided, as shown herein on this plat and do hereby cause a rededication of all streets, alleys and easements within and adjacent to the described subdivision in all respects, as shown hereon.

IN WITNESS WHEREOF the owners have set their hands and seal on this 13 day of March, 1998.

WAL-MART STORES EAST, Inc. [signature] [signature]
By: ROBERT M. BEDARD — By: Michael E. Gardner
Title: ASSISTANT V.P. — Title: Assistant Secretary

CORPORATE ACKNOWLEDGEMENT

STATE OF ~~NEW MEXICO~~ Arkansas)

COUNTY OF ~~OTERO~~ Benton)

On this 13th day of March, 1998, before me personally appeared Robert M. Bedard of WAL-MART STORES EAST, Inc, a DELAWARE Corporation on behalf of said corporation, known to me to be the persons who executed the foregoing instrument, and they acknowledged that they executed said instrument as their free act and deed.
WITNESS my hand and seal on this day and year last written above.

My Commission Expires, 10-1-2004 [signature], Notary Public

"NOTARY SEAL"
Kristi Stacy Notary Public
Benton County State of Arkansas
My Commission Expires 10/1/2004

Value Stores of New Mexico, Inc. [signature] [signature]
By: Norma Anderson — By: Barbara Ferguson
Title: President — Title: Secretary/Treasurer

CORPORATE ACKNOWLEDGEMENT

STATE OF NEW MEXICO)

COUNTY OF OTERO)

On this ___ day of ___, 1998, before me personally appeared Norma Anderson and Barbara Ferguson, of Value Stores of New Mexico, Inc, a New Mexico Corporation on behalf of said corporation, known to me to be the persons who executed the foregoing instrument, and they acknowledged that they executed said instrument as their free act and deed.
WITNESS my hand and seal on this day and year last written above.

My Commission Expires, ___ [signature], Notary Public

OFFICIAL SEAL
Sue Ellen Cox
NOTARY PUBLIC
STATE OF NEW MEXICO
My Commission Expires: 3-10-99

LEGEND

- BOUNDARY LINE
- RIGHT OF WAY LINE
- EASEMENT LINE
- SECTION LINE
- △ ALUMINUM MON.(FOUND)
- ⊡ COTTON SPINDLE SET
- ○ SET 5/8" REBAR WITH CAP (LS #13615)
- ● IRON PIN/PIPE FOUND
- CHAINLINK FENCE
- WIRE/METAL FENCE
- SHADING FOR FLOOD ZONES

ACCEPTANCE OF THE CITY OF ALAMOGORDO

THIS SUMMARY PLAT OF 'SHAW SUBDIVISION', ALAMOGORDO, OTERO COUNTY, NEW MEXICO IS ON THIS ___ DAY OF April, 1998, SUBMITTED AND APPROVED,

[signature] CITY MANAGER

ATTEST, [signature], CITY CLERK

STATE OF NEW MEXICO)
)SS
COUNTY OF OTERO)

RECORDED IN THE OFFICE OF THE COUNTY CLERK AND EX-OFFICIO RECORDER OF OTERO COUNTY, NEW MEXICO, AT 8:55 O'CLOCK, A M., THIS 22nd DAY OF April, 1998.
Marysa D. Quintana COUNTY CLERK BY: Christina Nuno
RECEPTION NO. 4215 BOOK: 51 PAGES: 62-63

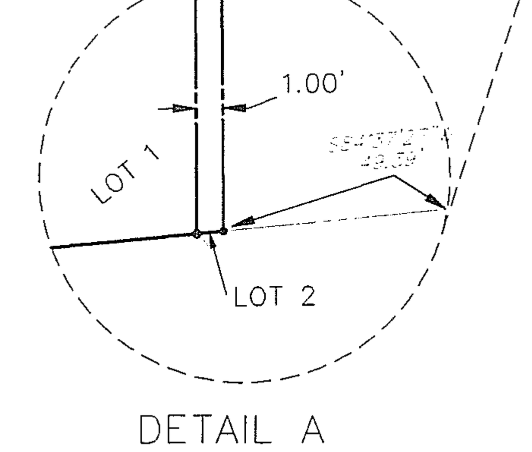

DETAIL A

SURVEYOR'S CERTIFICATION

I, JAMES G. TEMPLE, A NEW MEXICO REGISTERED PROFESSIONAL SURVEYOR CERTIFY THAT I CONDUCTED AND AM RESPONSIBLE FOR THIS SURVEY IS TRUE AND CORRECT TO THE BEST OF MY KNOWLEDGE AND BELIEF, AND THAT THIS SURVEY AND PLAT MEET THE MINIMUM STANDARDS FOR SURVEYING IN NEW MEXICO. I FURTHER CERTIFY THAT THE PLAN SHOWN AND DESCRIBED HERE ON IS TRUE AND CORRECT TO THE ACCURACY REQUIRED BY THE CITY OF ALAMOGORDO PLANNING COMMISSION AND THAT THE MONUMENTS HAVE BEEN PLACED AS SHOWN HEREON, TO THE SPECIFICATION OF THE SUBDIVISION REGULATIONS.

DATE 3/10/98, 19___

[signature]
JAMES G. TEMPLE
N.M. PROFESSIONAL SURVEYOR #13615

PROFESSIONAL SURVEYOR STATE OF NEW MEXICO No. 13615 JAMES G. TEMPLE

SCALE 1"=100'	2-5-98	JGT	MAD
	DATE	PLS	DRW

SUMMARY SUBDIVISON PLAT

CEI ENGINEERING ASSOCIATES, INC
ENGINEERS • PLANNERS • SURVEYORS

110 W. Central Ave. (501) 273-9472
Bentonville, AR 72712 FAX (501) 273-0844
JOB NO.: 12892.0
DWG NAME: 892PLAT

SHAW SUBDIVISON
1ST STREET AND NEW YORK AVE.
ALAMOGORDO NEW MEXICO

DATE 03-06-98 09:15 AM REV-0
SHEET NO. 1 OF 1

"Copyright 1996 by CEI Engineering Assoc., INC."